NOZZLE PROJ. FROM VESSEL ℄ TO RAISED FACE OF FLANGE

N1,N3,N4,N5A/B,N6,N7	1560mm
N2	1460mm
N8A/B,N9A/B	1195mm
N10	1440mm
N11A/B/C	1470mm
M2	1520mm

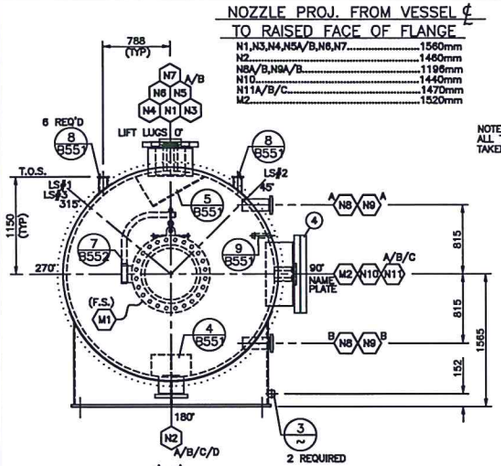

A–A

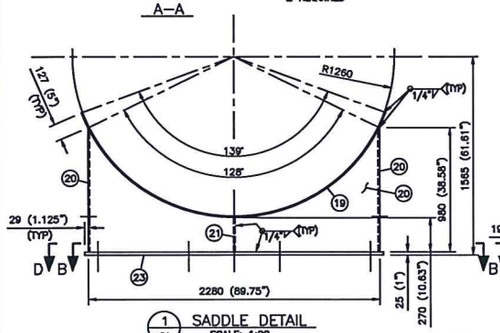

1 SADDLE DETAIL
SCALE: 1:20

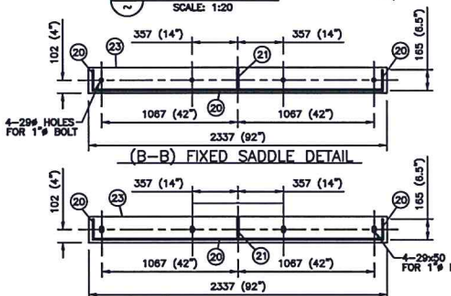

(B–B) FIXED SADDLE DETAIL

(D–D) SLIDING SADDLE DETAIL

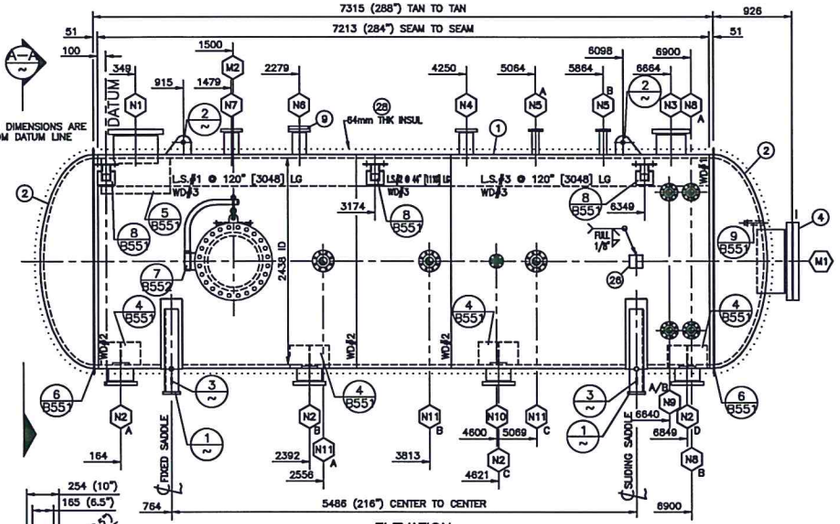

ELEVATION

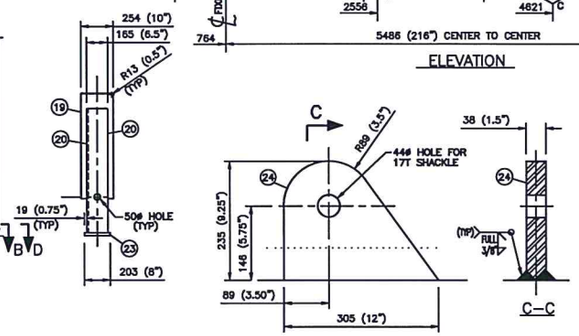

2 LIFT LUG DETAIL
SCALE 1:5
(2 REQ'D)

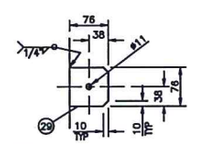

3 GROUND LUG DETAIL
SCALE 1:5
(2 REQ'D)

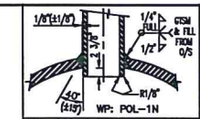

WD#8 N1

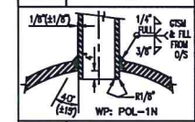

WD#7 M2

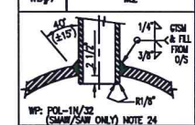

WD#6 M1

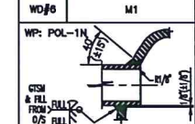

WD#5 N8A/B,N9A/B

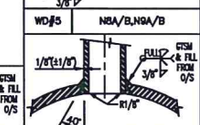

WD#4 N4 THRU N7 N10 THRU N11A/B/C/D

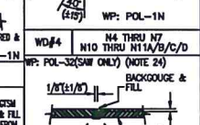

WD#3 LONG SEAMS

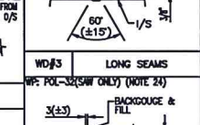

WD#10 N2A–D

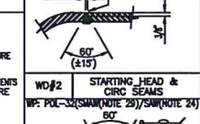

WD#9 N3

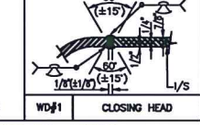

WD#2 STARTING HEAD & CIRC SEAMS

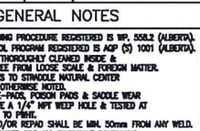

WD#1 CLOSING HEAD

BILL OF MATERIAL

ITEM	QTY.	DESCRIPTION	MAT'L SPEC.	STG
1	1	SHELL 1.625" NOM x 96" ID x 284" LG	SA-516-70N	
2	2	HEADS 2:1 SEMI-ELLIPTICAL 1.625" NOM (1.562" MIN) x 96" ID	SA-516-70N	
		c/w 2" S.F.		
3	2	FLG NPS 24 CL300 RF "HS" x 406 LG (610 ID x 732 OD)	SA-350-LF2.CL1	
4	2	BLIND FLG NPS 24 CL300	SA-350-LF2.CL1	
5	1	FLG NPS 16 CL300 RF "HS" x 406 LG (406 ID x 521 OD)	SA-350-LF2.CL1	
6	4	FLG NPS 8 CL300 RF "HS" x 254 LG (194 ID x 294 OD)	SA-350-LF2.CL1	
7	1	FLG NPS 10 CL300 RF "HS" x 406 LG (243 ID x 346 OD)	SA-350-LF2.CL1	
8	3	FLG NPS 4 CL300 RF "HS" x 356 LG (97 ID x 168 OD)	SA-350-LF2.CL1	
9	1	BLIND FLG NPS 4 CL300	SA-350-LF2.CL1	
10	4	FLG NPS 3 CL300 RF "HS" x 356 LG (74 ID x 137 OD)	SA-350-LF2.CL1	
11	--	--	--	
12	3	FLG NPS 4 CL300 RF "HS" x 254 LG (97 ID x 168 OD)	SA-350-LF2.CL1	
13	1	FLG NPS 2 CL300 RF "LWN" x 229 LG (51 ID x 84 OD)	SA-350-LF2.CL1	
14	2	FLG NPS 2 CL300 RF "LWN" x 356 LG (51 ID x 84 OD)	SA-350-LF2.CL1	
15	2	GASKET NPS 24 CL300 RF SPIRAL WOUND GRAPHOIL FILLED (CGI TYPE)	T-316-SS	
16	48	STUDS 1 1/29 x 229 LG c/w 2 HEX NUTS EA UN THRD	SA-193-B7N/SA-194-2HM	
17	1	GASKET NPS 4 CL300 RF SPIRAL WOUND GRAPHOIL FILLED (CGI TYPE)	T-316-SS	
18	8	STUDS 3/4ø x 114 LG c/w 2 HEX NUTS EA UN THRD	SA-193-B7N/SA-194-2HM	
19	2	PL 3/8" x 254 WD x 3081± LG ROLLED TO VESSEL SHELL OD	SA-516-70N	
20	2	PL 1/2" x FORMED CHANNEL 165 x 2280 x 165 O/S x 980 LG	SA-516-70N	
21	2	PL 1/2" x 165 WD x 270 LG	SA-516-70N	
22	--	--	--	
23	2	PL 1" x 203 WD x 2337 LG	SA-516-70N	
24	2	PL 1 1/2" x 235 WD x 305 LG	SA-516-70N	
25	--	--	--	
26	1	PLAINS STD VESSEL NAME PLATE c/w RAISED CHAR	T-304-SS/SA-516-70N	
27	--	--	-	
28	130ft²	2 1/2" THK MINERAL WOOL INSULATION c/w ALUMINUM CLADDING	MINERAL WOOL	
29	2	PL 3/8" x 76 SQUARE	G40.21-44W	

MATERIAL LISTED FOR ONE FOUR REQ'D

ITEMS	MK. NO.	NO.	SIZE	RATING	SCH	TYPE	SERVICE	W.D.	RE-PAD
3,4,15,16	M2	1	NPS 24	CL300	–	RFHB	MANWAY c/w BLIND	7	-
3,4,15,16	M1	1	NPS 24	CL300	–	RFHB	MANWAY c/w BLIND	8	-
12	N11A/B/C	3	NPS 4	CL300	–	RFHB	ANODE	4	-
13	N10	1	NPS 2	CL300	–	RFLWN	TEMPERATURE GAUGE	5	-
10	N9A/B	2	NPS 3	CL300	–	RFHB	LEVEL TRANSMITTER	5	-
10	N8A/B	2	NPS 3	CL300	–	RFHB	LEVEL TRANSMITTER	4	-
8	N7	1	NPS 4	CL300	–	RFHB	VENT	4	-
8,9,17,18	N6	1	NPS 4	CL300	–	RFHB	SPARE c/w BLIND	4	-
14	N5A/B	2	NPS 2	CL300	–	RFLWN	PRESSURE TRANSMITTER	4	-
8	N4	1	NPS 4	CL300	–	RFHB	PSV RELIEF	4	-
7	N3	1	NPS 10	CL300	–	RFHB	VAPOR OUTLET	9	-
6	N2A/B/C/D	4	NPS 8	CL300	–	RFHB	LIQUID OUTLET	10	-
5	N1	1	NPS 16	CL300	–	RFHB	INLET	8	-

NOZZLE SCHEDULE

DESIGN DATA

U DESIGN & CONSTRUCTION: 2013 ASME CODE, SECTION VIII, DIV.1; UW-12 (a)(RT-1).
PROVINCE(S) OF REGISTRATION: AB

SERVICE: SOUR	CORROSION ALLOWANCE: 0.128" (3.2mm)
DES. PRESS.: 581 psig (4006 kPag)	DESIGN TEMP.: 446°F (230°C)
M.A.W.P.: SAME AS DES. PRESS.	M.D.M.T.: -49°F @ 581 psig (-45°C @ 4006 kPag)
M.A.E.W.P.: 15 psig (103 kPag)(FULL VACUUM)	EXT. DES. TEMP.: 446°F (230°C)
OPERATING PRESS.: 290 psig (2000 kPag)	OPERATING TEMP.: 408°F (209°C)
	--
FLG. MAX. PRESS. RATING @ D.T./M.D.M.T.: --	FLG. TEST RATING: --
NOZZLE REINFORCEMENT CALC. PRESS.: 581 psig (4006 kPag)(OMITTED)	LIMITED BY: HEADS
MAX. HYDROSTATIC HEAD PRESS.(OPER.): --	
HYDROSTATIC TEST PRESS.: 758 psig (5213 kPag)	VOLUME: 1341 ft³ (38 m³)

	RADIOGRAPHY	JOINT TYPE	JOINT EFF.	JOINT CAT.	CODE PARA.
VESSEL LONG SEAMS:	FULL (NOTE 17)	ONE	1.0	A	UW-11(a)
VESSEL CIRC. SEAMS:	FULL (NOTE 17)	ONE	1.0	B	UW-11(a)
NOZZLE NECKS >	FULL (NOTE 19)	ONE	1.0	C	UW-11(a)
REPAD (NOTE #10):	--	--	--	--	--

	VESSEL SECTIONS CYLINDRICAL	HEADS ASME 2:1 S.E.	NOZZLES
CALCULATED THICKNESS INCL. C.A.:	1.558" (39.573mm)	1.532" (38.913mm)	PER CALCULATION
MINIMUM THICKNESS USED:	1.625" (41.275mm)	1.562" (39.675mm)	PER NOZZLE SCH.

C.V.N. IMPACT TESTS: REQUIRED ITEM 1&2 CVN IMPACT TEST @ 15 ft/lbs @ -49°F PLUS PRODUCTION IMPACT PER UG-84.
POST WELD HEAT TREATMENT: YES, 1.75 HR @ 1150°F–1175°F
PLAINS SERIAL NUMBER: 4659–B1/B2/B3/B4/2 C.R.N.: V4597.2 (SEE NOTE 33)

GEN. NOTES CONT'N.

13.) PER UG 82: ATTACHMENTS WHICH COVER CIRC OR LONG SEAMS MAY BE NOTCHED & LEFT UNWELDED. IF WELDING ACROSS CIRC OR LONG SEAM IS REQUIRED, SEAM MUST BE GROUND FLUSH PRIOR TO WELDING.
14.) ALL ATTACHMENTS USE WPS: POL–1N FOR WELDS TO PRESSURE ENVELOPE & POL–21N FOR NON PRESSURE ENVELOPE WELDS.
15.) FULL PENETRATION WELDS FOR ALL ATTACHMENTS & ATTACHMENTS MATERIAL TO BE SAME SPECIFICATION AS PRESSURE BOUNDRY.
16.) PWHT STENCIL #2.
17.) 100% RT AFTER PWHT.
18.) ALL MATERIALS TO MEET NACE MR0175, LATEST EDITION.
19.) SELECT CHEMISTRY FOR ALL PRESSURE BOUNDRY & ATTACHMENT MATERIAL.
20.) UT CKT. D OF 2 NOZZLES >= 4 NPS.
21.) MT: a) ALL PRESSURE RETAINING PLATE EDGES PREPARED FOR WELDING.
b) ALL BACKGOUGING.
c) LIFT LUG WELDS.
d) 2 NOZ. CKT D WELDS, < 4 NPS
22.) MAX 2 ATTEMPTS AT SAME LOCATION FOR WELDS REPAIRS.
23.) MAJOR REPAIRS, (THE LESSER OF 20% OF BASE MATERIAL OR 10mm IN DEPTH) REQUIRES CLIENT APPROVAL.
24.) MAX. HEAT INPUT FOR SAW IS 88,900 J/in.
25.) BHN MAX. 200 IN B/M/H/H/B. TO BE TAKEN ON INSIDE VESSEL SURFACE WHERE POSSIBLE. WELDS TO BE GROUND FLUSH WITH BASE MATERIAL & ETCHED TO LOCATE HAZ:
a) 2 WELDS PER WPS, PER WELDER.
b) 1 TEST ON EACH CIRC & LONG SEAM.
c) 10% OF NOZ. CKT D & B & ATTACHMENTS.
26.) FLANGES TO BE PROTECTED WITH ANTI-SPATTER DURING PWHT.
27.) HYDRO GASKETS TO BE SAME AS IN SERVICE GASKETS WITHOUT ADDITIVES SUCH AS GLUE, SHELLAC, COMPOUNDS, ETC.
28.) TELL-TALE HOLES TO HAVE NIPPLES INSTALLED TO EXTEND 50mm BEYOND INSULATION & PLUGGED WITH GREASE.
29.) DRAIN CONNECTION TO BE GROUND FLUSH.
30.) PREHEAT OF 150°F REQ'D ON PRESS WELDS WHEN WALL THICKNESS IS >3/8" AND AMBIENT TEMP. IS <80°F.
31.) FULL PEN DBL-WELDED JOINTS SHALL BE BACK GOUGED TO SOUND METAL & MT OR PT EXAMINED PRIOR TO WELDING THE OTHER SIDE.
32.) TACK WELDS SHALL BE MADE BY QUALIFIED WELDERS.
33.) CRN REF DWG#4391–B501 REV. 7
34.) PIPE FLANGES: SHALL BE CLEANED OF ALL MILL SCALES, RUST, ETC & COATED W/ AN APPROVED CORROSION PREVENTATIVE PRODUCT. USE PLASTIC PIPE FLANGE COVERS IN ALL CASES W/ TIE–WRAP (#TY27M OR SIMILAR) IN FOUR PLACES AT 90° OF EACH OTHER MINIMUM AT NO TIME SHOULD "DUCT TAPE" BE USED.
35.) INTERPASS TEMPERATURE SHALL BE <315°C.
36.) IF DOUBLE WELDED & GAWN IS USED, IT SHALL BE REMOVED PRIOR TO SECOND SIDE WELDING.
37.) ALL FILLERS SHALL HAVE A HYDROGEN CONTENT OF <=H8.

REFERENCE DRAWINGS

DWG. NO.	DESCRIPTION
4659–B551	MISCELLANEOUS DETAIL
4659–B552	DAVIT DETAIL

REVISIONS

NO.	DATE	BY	APP'D	DESCRIPTION
0	14–07–09	GT	CK	PRELIMINARY
1	14–08–07	RL	CK	ADDED GENERAL NOTES #S 35,36,37.
2	14–08–14	KS	CK	UPDATED PLAINS SERIAL NUMBER.

SHIPPING WT.	62000 lbs. (28182 kgs)
TEST WT.	145680 lbs. (66218 kgs)
OPERATING WT.	124760 lbs. (56709 kgs)
SANDBLAST:	SSPC–SP10
PRIMER:	1 s/c INORGANIC ZINC
	2–3 MILS DFT (SADDLES ONLY)
PAINT:	CLOVA ZINC II 83002

GENERAL NOTES

1.) QUALIFIED WELDING PROCEDURE REGISTERED IS WP. 558.2 (ALBERTA).
2.) QUALITY CONTROL PROGRAM REGISTERED IS AQP (3) 1001 (ALBERTA).
3.) VESSEL TO BE THOROUGHLY CLEANED INSIDE & OUTSIDE, & FREE FROM LOOSE SCALE & FOREIGN MATTER.
4.) ALL BOLT HOLES TO STRADDLE NATURAL CENTER LINES UNLESS OTHERWISE NOTED.
5.) ALL NOZZLE RE–PADS, POISON PADS & SADDLE WEAR PLATES TO HAVE A 1/4" NPT WEEP HOLE & TESTED AT 15 psig. PRIOR TO PWHT.
6.) ANY CONN. AND/OR REPAD SHALL BE MIN. 50mm FROM ANY WELD.
7.) MTR's ARE REQUIRED FOR ALL PRESSURE CONTAINING PLATE, PIPE & WELD FITTINGS & ATTACHMENTS.
8.) ALL THICKNESSES & DIMENSIONS w/ NO DESIGNATION ON THIS DRAWINGS ARE IN MILLIMETERS(mm).
9.) FOR PLAINS STD DIM TOLERANCES SEE DWG#SD–001
10.) NO SPLIT REPADS PERMITTED.
11.) WHERE BACK–WELDING IS ADDED BUT IS NOT SPECIFIED IN THE WELD JOINT DETAIL, THE SAME WPS AS INDICATED IN THE WELD JOINT DETAIL SHALL BE USED & WELD SIZE NEED NOT EXCEED 1/4".
12.) PER UW–42 ALL BASE METAL AREAS REPAIRED BY WELDING SHALL BE MAGNETIC PARTICLE OR LIQUID PENETRANT EXAMINED.

PROJECT #: CNV015
PO #: CNV015–MAT1100–502

DRAWN G.TAN	DATE 14–07–09	CUSTOMER/PROJECT/LOCATION
CHECKED HH	DATE 14–08–07	
ENG. APP'L HH	DATE 14–08–07	TITLE GS5/GS6/GS7/GS8–V–9260 96" (2438) ID x 24'–0" (7315) LG TAN TO TAN HORIZONTAL GROUP SEPARATOR
PROD. APP'L	DATE	
JOB NO. 4659	SCALE AS SHOWN	DRAWING NO. 4659–B501 REV. 2

NAME: M:\SHARED DRAWINGS\4659\B–PRESSURE VESSELS\4659–B501 (V2–H4 AS BUILT).DWG DATED: August 18, 2011 TIME: 3:43 PM

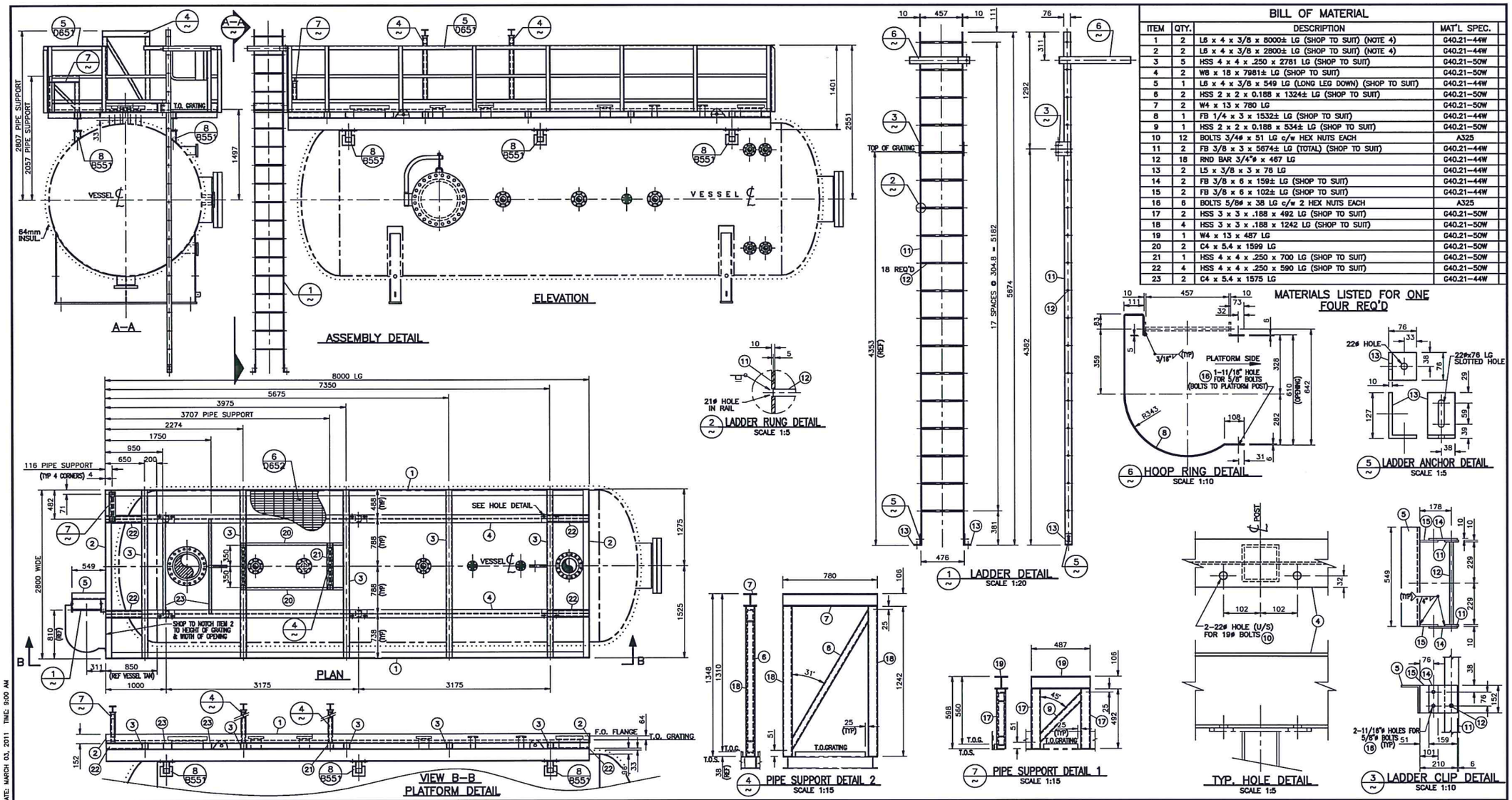

BILL OF MATERIAL

ITEM	QTY.	DESCRIPTION	MAT'L SPEC.
1	2	L6 x 4 x 3/8 x 8000± LG (SHOP TO SUIT) (NOTE 4)	G40.21-44W
2	2	L6 x 4 x 3/8 x 2800± LG (SHOP TO SUIT) (NOTE 4)	G40.21-44W
3	5	HSS 4 x 4 x .250 x 2781 LG (SHOP TO SUIT)	G40.21-50W
4	2	W8 x 18 x 7981± LG (SHOP TO SUIT)	G40.21-50W
5	1	L6 x 4 x 3/8 x 549 LG (LONG LEG DOWN) (SHOP TO SUIT)	G40.21-44W
6	2	HSS 2 x 2 x 0.188 x 1324± LG (SHOP TO SUIT)	G40.21-50W
7	2	W4 x 13 x 780 LG	G40.21-50W
8	1	FB 1/4 x 3 x 1532± LG (SHOP TO SUIT)	G40.21-44W
9	1	HSS 2 x 2 x 0.188 x 534± LG (SHOP TO SUIT)	G40.21-50W
10	12	BOLTS 3/4ø x 51 LG c/w HEX NUTS EACH	A325
11	2	FB 3/8 x 3 x 5674± LG (TOTAL) (SHOP TO SUIT)	G40.21-44W
12	18	RND BAR 3/4"ø x 467 LG	G40.21-44W
13	2	L5 x 3/8 x 3 x 76 LG	G40.21-44W
14	2	FB 3/8 x 6 x 159± LG (SHOP TO SUIT)	G40.21-44W
15	2	FB 3/8 x 6 x 102± LG (SHOP TO SUIT)	G40.21-44W
16	6	BOLTS 5/8ø x 38 LG c/w 2 HEX NUTS EACH	A325
17	2	HSS 3 x 3 x .188 x 492 LG (SHOP TO SUIT)	G40.21-50W
18	4	HSS 3 x 3 x .188 x 1242 LG (SHOP TO SUIT)	G40.21-50W
19	1	W4 x 13 x 487 LG	G40.21-50W
20	2	C4 x 5.4 x 1599 LG	G40.21-50W
21	1	HSS 4 x 4 x .250 x 700 LG (SHOP TO SUIT)	G40.21-50W
22	4	HSS 4 x 4 x .250 x 590 LG (SHOP TO SUIT)	G40.21-50W
23	2	C4 x 5.4 x 1575 LG	G40.21-44W

REFERENCE DRAWINGS

DWG. NO.	DESCRIPTION
4659-B501	V-9260 HORIZONTAL GROUP SEPARATORS
4659-D651	RAILINGS DETAIL
4659-D652	GRATINGS DETAIL

REVISIONS

NO.	DATE	BY	APP'D	DESCRIPTION	NO.	DATE	BY	APP'D	DESCRIPTION
0	14-08-11	KS		PRELIMINARY					

SHIPPING WT. 1440 kgs (3168 lbs)
WEIGHT: 1348 kgs (2966 lbs) w/o LADDER
SANDBLAST: SSPC-SP6
PRIMER: RUSTER 710 SERIES ASA CODE 13591
FINISH PAINT: CLOVERDALE IND ENAMEL 7400 SERIES ASA CODE 13591 – SAFETY YELLOW

GENERAL NOTES

1.)
2.)
3.) W
4.) LIVE
5.) UNLE TO WEI
6.) /

PROJECT #: CNV015
PO #: CNV015-MAT1100-502

DRAWN K SINGH	DATE 14-08-11	CUSTOI	
CHECKED	DATE		
ENG. APP'L	DATE	TITLE	GS5/GS6/GS7/GS8-V-9260 HORIZONTAL GROUP SEPARATORS LADDER & PLATFORM DETAIL
PROD. APP'L	DATE		
JOB NO. 4659		SCALE 1:30	DRAWING NO. 4659-D601 REV. 0

NAME: (F:\Shared Drawings\4391\4391-D501.DWG DATE: MARCH 03, 2011 TIME: 9:00 AM