PROJECT DESCRIPTION

ONE (1) AIR COMPRESSOR PACKAGE
FOR: HUSKY OIL OPERATIONS LTD.
LOCATION NAME: MCMULLEN THERMAL CONDUCTION
PILOT (TCP) PROJECT LSD: 03-35-078-25 W4

FABRICATED BY:

ENERFLEX LTD
CALGARY, ALBERTA, CANADA

TANK CAPACITIES

GLYCOL (EJW) SURGE TANK:	103L
GLYCOL (AJW) SURGE TANK:	103L
WASTE OIL STORAGE TANK:	1281L
COMP/ENGINE OIL DAYTANK:	2 X 480L
WASTE GLYCOL STORAGE TANK:	1281L

EQUIPMENT LIST

TAG NO.	DESCRIPTION	P&ID
FR-0200A/B	INLET VACUUM FILTERS	12518-111 SHT. 1
V-0200	OIL SEPARATOR	12518-111 SHT. 2
E-0200	COOLER SECTION	12518-111 SHT. 2
CE-0200	ENGINE	12518-112 SHT. 1
K-0200	SCREW COMPRESSOR FRAME	12518-112 SHT. 1
CP-0200	CONTROL PANEL	12518-112 SHT. 1
E-0200	AIR/AC/EJW/AJW COOLER	12518-112 SHT. 1
E-0201	COMP. OIL COOLER	12518-113 SHT. 1
FR-0201A/B	COMP. LUBE OIL FILTERS	12518-113 SHT. 1
P-0201	ENGINE PRE-LUBE OIL PUMP	12518-114 SHT. 1
T-0200	WASTE OIL TANK	12518-114 SHT. 1
T-0201	ENGINE OIL DAYTANK	12518-114 SHT. 1
T-0202	COMP OR ENGINE OIL DAYTANK	12518-114 SHT. 1
V-0201	FUEL GAS SCRUBBER	12518-115 SHT. 1
T-0203	WASTE GLYCOL TANK	12518-116 SHT. 1
T-0204	GLYCOL (EJW) SURGE TANK	12518-116 SHT. 1
T-0205	GLYCOL (AJW) SURGE TANK	12518-116 SHT. 2
E-0200	EJW COOLER	12518-116 SHT. 1
E-0200	AJW COOLER	12518-116 SHT. 2

POWER REQUIREMENTS

ENGINE IGNITION SYSTEM:	VOL: 24 VDC
CONTROL PANEL:	VOL: 24 VDC
LEL & FIRE DETECTION:	VOL: 24 VDC
LIGHTS:	VOL: 120 VAC
BUILDING FANS:	VOL: 120 VAC
KIM HOT START:	VOL: 480 VAC
BUILDING HEATERS:	VOL: 120 VAC
IMMERSION HEATER:	VOL: 480 VAC

SYSTEM CONSUMABLES

COMPRESSOR LUBE OIL:	S9-68, 776 L
ENGINE LUBE OIL:	SAE 40, LOW ASH, 810 L
GLYCOL:	50% ETHYLENE INHIBITED GLYCOL/WATER SOLUTION IN ENGINE & AUXILIARY JACKED WATER SYSTEMS AJW & EJW CAPACITY: 2755 L

DESIGN CRITERIA & APPLICABLE CODES

SITE ELEVATION:		575 M ABOVE MEAN SEA LEVEL
BAROMETRIC PRESSURE:		94.53 KPAA
AMBIENT TEMPERATURE:	MAXIMUM	40°C
	MINIMUM	-45°C
PROCESS INLET:	DESIGN	ATM @ AMBIENT
PROCESS FINAL DISCHARGE:	DESIGN	2413 KPAG @ 121°C
INSTRUMENT AIR:	MINIMUM PRESSURE	241 KPAG
	MAXIMUM PRESSURE	1034 KPAG
	QUALITY	FILTERED/DRY, 10°C MAXIMUM DEW POINT
APPLICABLE CODE:	CODE PIPING	B31.3 - LATEST EDITION
	NON-CODE PIPING	TESI C01, 1mm CA
	VESSEL	ASME SECTION VIII
	EXCHANGER	ASME SECTION VIII
	STRUCTURAL	AWS D1.1
	ELECTRICAL	CEC
REGISTRATION:	VESSEL	CRN (AB, BC, SASK)
MISCELLANEOUS:	GASKETS	CG TYPE, SPIRAL WOUND, GRAPHITE FILLED, 316SS
	PROCESS PIPE	CARBON STEEL
	UTILITY PIPE	CARBON STEEL
	FLANGES	RAISED FACE (UNLESS OTHERWISE NOTED)
	THREAD SEALANT	JETLUBE. NO SWAK ALLOWED
		MTR's REQUIRED
TUBING & FITTINGS: (SPE-010-TUB)	PROCESS	TUBING - 316(SS) SMLS / 3/8" MIN. DIA.
		FITTINGS - 316(SS)
		FERRULES - 316(SS) BACK / 316(SS) FRONT
	UTILITY	TUBING - 304(SS)/ 3/8" MIN. DIA.
		FITTINGS - ZINC PLATED CS
		FERRULES - 316(SS) BACK / CS FRONT
ELECTRICAL:		RIGID ALUMINUM CONDUIT
SUITABLE FOR USE IN:		CLASS 1, ZONE 2, GROUP D

DESIGN SPECIFICATION:

ENERFLEX LTD. SCOPE OF SUPPLY ON THIS PROJECT CONSISTS OF ONE SKIDDED AIR COMPRESSOR PACKAGE.

PACKAGE CONSISTS OF ONE (1) CATERPILLAR G3516LE-AFRC ENGINE DRIVING AN ARIEL RG357M, AIR COMPRESSOR.

PRIMER:	-TPS-SP-001, FIN-1, RED OXIDE
PAINT:	-TPS-SP-001, FIN-1, WARM GRAY
PROCESS PIPING:	-10% RADIOGRAPHIC TESTING
	-10% MT ON FILLET WELDS
	-1.6MM CORROSION ALLOWANCE
	-NO PWHT
	-SSPC-SP3
	-NO PICKLING
	-NDE TO CGSB
	-MTR's REQUIRED
VESSELS:	-10% RADIOGRAPHIC TESTING
	-10% MT ON FILLET WELDS
	-NO PWHT
	-SSPC-SP3
	-NO PICKLING
	-1.6MM CORROSION ALLOWANCE
	-NDE TO CGSB
	-MTR's REQUIRED

ENG. STAMP

CERTIFIED AS BUILT
NAME K. WALTON DATE 12/22/10

PERMIT TO PRACTISE APEGGA PERMIT: No. P8651

REV	DESCRIPTION	DATE	BY	APR
4	AS BUILT	12/22/10	JH	KG
3	ISSUED FOR CONSTRUCTION TO THE SHOP	07/15/10	KW	AR
2	GENERAL REVISIONS	06/30/10	KW	AR
1	ISSUED FOR FABRICATION	06/25/10	KW	AR
A	ISSUED FOR APPROVAL	06/04/10	KW	AR

DATE 12/09/09 | SCALE NTS
DRAWN BY K. WALTON | CHECKED BY A. ROSSS | APPROVED BY A. ROSSS
CUST PO N/A
STEP CODE N/A

FOR HUSKY OIL OPERATIONS
CATERPILLAR G3516LE-AFRC
ARIEL RG357M

ENERFLEX
10121 - BARLOW TRAIL N.E.
CALGARY ALBERTA CANADA

TITLE P & I DIAGRAM
PROJECT DESCRIPTION
AND OVERVIEW

DWG NO 12518-099 | SHT 1 | REV 4

THE INFORMATION CONTAINED HEREIN IS THE CONFIDENTIAL PROPERTY OF TORQMONT ENERGY SYSTEMS AND IS NOT FOR PUBLICATION, AND NO PART THEREOF SHALL BE COPIED OR COMMUNICATED TO A THIRD PARTY WITHOUT AUTHORIZATION FROM TORQMONT ENERGY SYSTEMS.

PLOT DATE December 22, 2010 P:\10000 Projects\12518 Husky S1340 G3516LE Ariel RG357M\Drafting\PA00\12518-111-AS BUILT.dwg

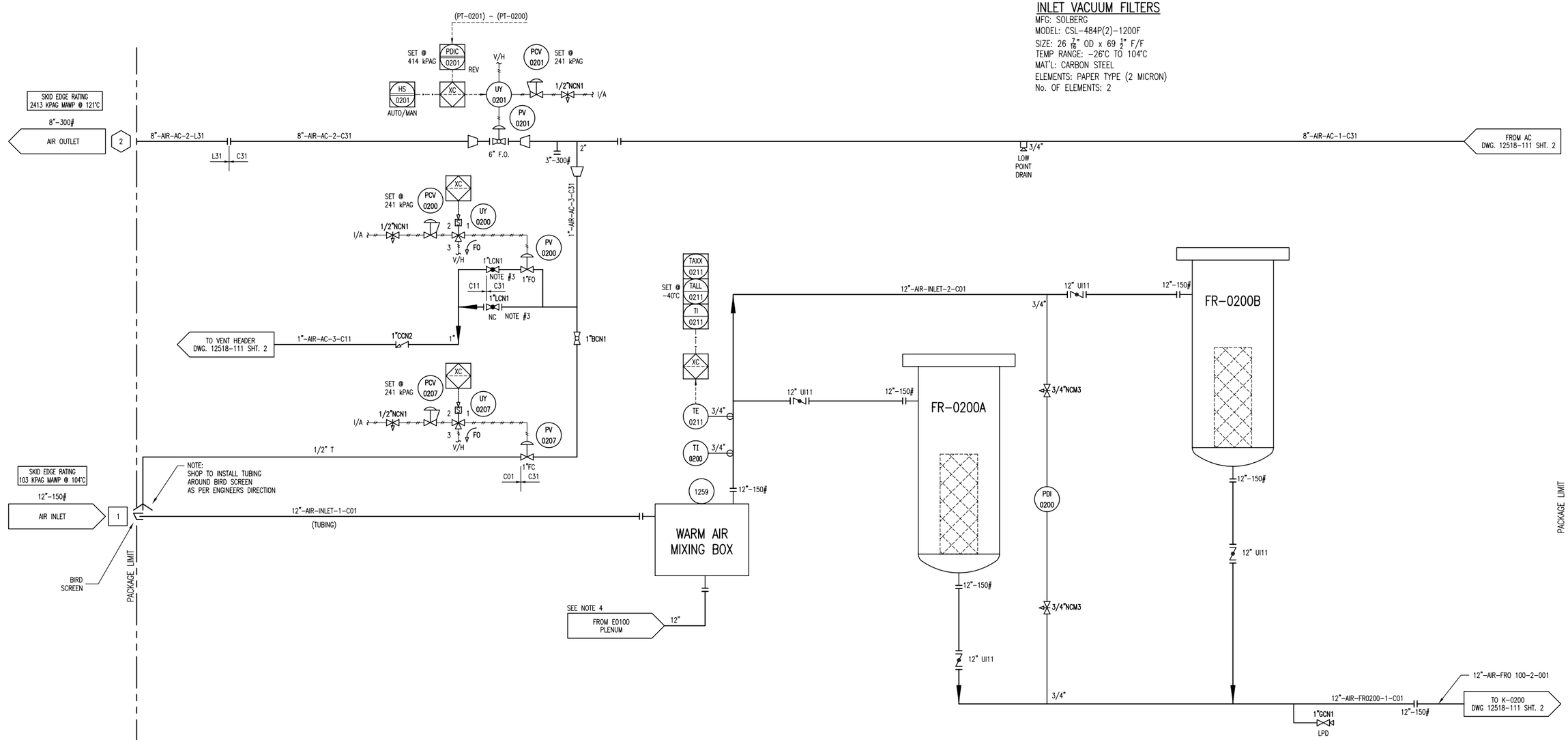

NO SWAK ALLOWED

MTR's REQUIRED ON ALL PRESSURE RETAINING PIPE & FITTINGS

DESTROY PREVIOUS COPIES

REV	DESCRIPTION	DATE	BY	APR
7	AS BUILT	12/22/10	JH	KG
6	FOR REGISTRATION	NOV 23/10	JH	AR
5	TE 0211 ADDED	SEP 10/10	KW	AR
4	GENERAL REVISIONS	AUG 26/10	KW	AR
3	ISSUED FOR CONSTRUCTION TO THE SHOP	07/15/10	KW	AR
2	GENERAL REVISIONS	06/30/10	KW	AR
1	ISSUED FOR FABRICATION	06/25/10	KW	AR
A	ISSUED FOR APPROVAL	06/04/10	KW	AR

DATE 12/09/09 | SCALE NTS
DRAWN BY K. WALTON | CHECKED BY A. ROSSS | APPROVED BY A. ROSSS
CUST PO N/A
STEP CODE 131 211 212 453

PERMIT TO PRACTISE APEGGA PERMIT: No. P8651

FOR HUSKY OIL OPERATIONS
CATERPILLAR G3516LE-AFRC
ARIEL RG357M

ENERFLEX
10121 - BARLOW TRAIL N.E.
CALGARY ALBERTA CANADA

ENG. STAMP

CERTIFIED AS BUILT
NAME K. WALTON DATE 12/22/10

TITLE P & I DIAGRAM PROCESS GAS

DWG NO 12518-111 | SHT 1 | REV 7

NOTES:
1. SEE DRAWING 099 FOR GENERAL NOTES & PROJECT OVERVIEW.
2. SEE DRAWING 199 FOR P&ID SYMBOL LEGEND.
3. THROTTLE VALVE TO CONTROL BLOWDOWN RATE & AVOID COMPRESSOR OIL LOSS.
4. TAKE WARM AIR FROM BOTTOM OF COOLER PLENUM.

THE INFORMATION CONTAINED HEREIN IS THE CONFIDENTIAL PROPERTY OF TORQUMONT ENERGY SYSTEMS AND IS NOT FOR PUBLICATION, AND NO PART THEREOF SHALL BE COPIED OR COMMUNICATED TO A THIRD PARTY WITHOUT AUTHORIZATION FROM TORQUMONT ENERGY SYSTEMS.

PLOT DATE December 22, 2010 P:\10000 Projects\12518 Husky S1340 G3516LE Ariel RG357M\Drafting\P&ID\12518-111-AS BUILT.dwg

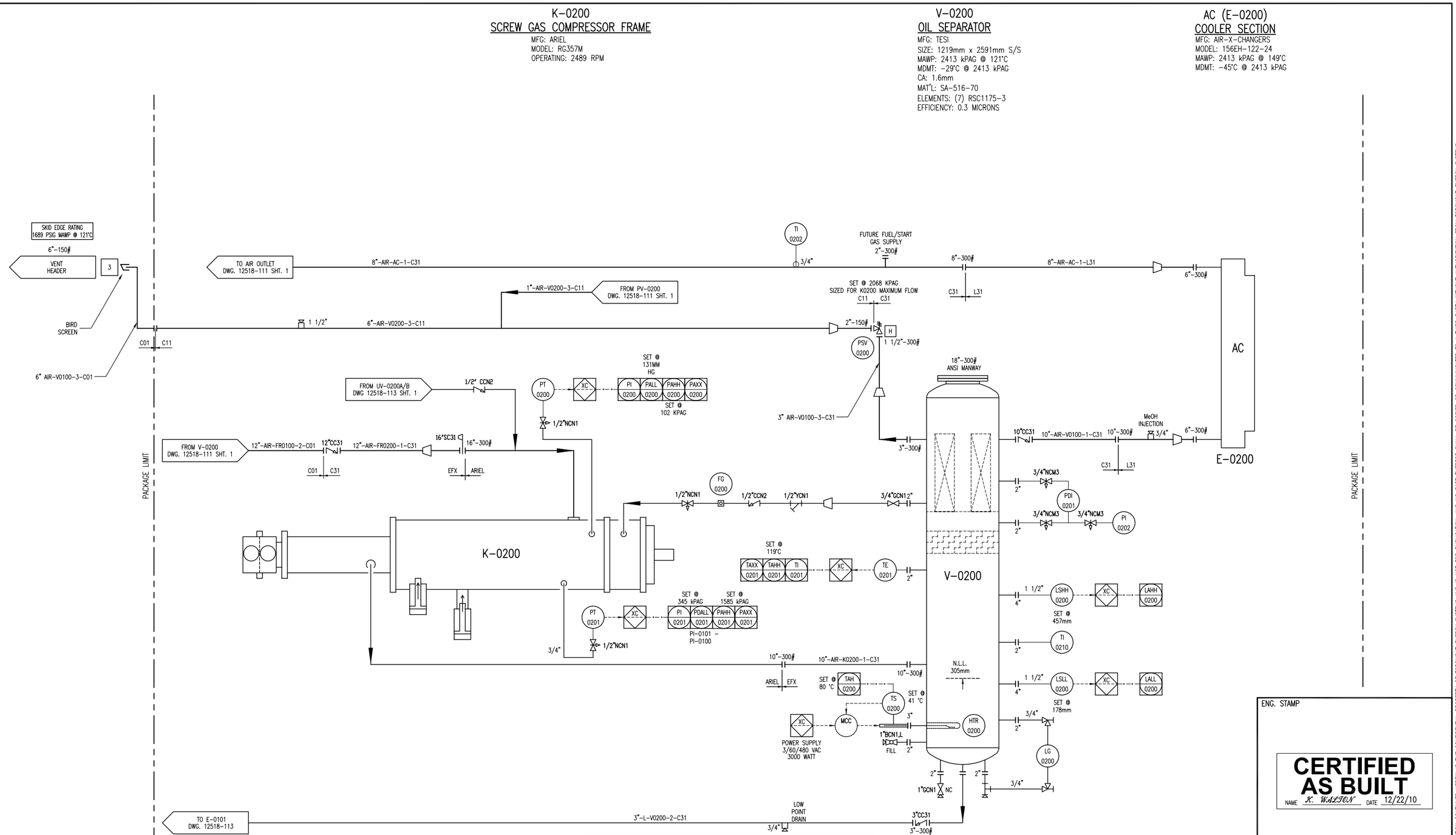

MTR's REQUIRED ON ALL PRESSURE RETAINING PIPE & FITTINGS

DESTROY PREVIOUS COPIES

NO SWAK ALLOWED

REV	DESCRIPTION	DATE	BY	APR
7	AS BUILT	12/22/10	JH	KG
6	FOR REGISTRATION	NOV 23/10	JH	AR
5	TAG REMOVED	SEP 17/10	KW	AR
4	AIR COOLER REVISED	07/21/10	KW	AR
3	ISSUED FOR CONSTRUCTION TO THE SHOP	07/15/10	KW	AR
2	GENERAL REVISIONS	06/30/10	KW	AR
1	ISSUED FOR FABRICATION	06/25/10	KW	AR
A	ISSUED FOR APPROVAL	06/04/10	KW	AR

DATE 12/09/09 | SCALE NTS
DRAWN BY X. WALTON | CHECKED BY A. ROSSS | APPROVED BY A. ROSSS
CUST PO N/A
STEP CODE 131 213 214 453

PERMIT TO PRACTISE APEGGA PERMIT: No. P8651

FOR HUSKY OIL OPERATIONS CATERPILLAR G3516LE-AFRC ARIEL RG357M

ENERFLEX
10121 - BARLOW TRAIL N.E.
CALGARY ALBERTA CANADA

TITLE P & I DIAGRAM PROCESS GAS

DWG NO 12518-111 | SHT 2 | REV 7

ENG. STAMP

CERTIFIED AS BUILT
NAME X. WALTON DATE 12/22/10

THE INFORMATION CONTAINED HEREIN IS THE CONFIDENTIAL PROPERTY OF TORQMONT ENERGY SYSTEMS AND IS NOT FOR PUBLICATION, AND NO PART THEREOF SHALL BE COPIED OR COMMUNICATED TO A THIRD PARTY WITHOUT AUTHORIZATION FROM TORQMONT ENERGY SYSTEMS.

PLOT DATE December 22, 2010 P:\10000 Projects\12518 Husky S1340 G3516LE Ariel RG357M\Drafting\PAID\12518-111-AS BUILT.dwg

K-0200
SCREW GAS COMPRESSOR FRAME
MFG: ARIEL
MODEL: RG357M
OPERATING SPEED: 2489 RPM
OIL TEMPERATURE: 77°C

CE-0200
COMPRESSOR ENGINE
MFG: CATERPILLAR
MODEL: G3516LE-AFRC
BORE: 6.7 INCHES
STROKE: 7.5 INCHES
DISPLACEMENT: 4210 IN
COMP RATIO: 8:1
POWER: 1340 BHP @ 1400 RPM

CP-0200
CONTROL PANEL
MFG: TESI
POWER: 15A @ 24 VDC
MAKE: ALLEN BRADLEY
PROCESSOR: COMPACT LOGIX

KBU-0100/0101/0102
EXHAUST FANS
16" VENTURI XP FAN
115/230V, 1HP, 60HZ, 1/4AP
CLASS 1, DIV.1, GROUP C & D

E-0200
PACKAGE GAS COOLER FRAME
MFG: AIR-X-CHANGERS
MODEL: 156EH-122-24
TYPE: FORCED DRAFT
AIR FLOW: 239,534 SCFM
FAN TYPE: 1 MOORE 156 DIA x 10 BLADE
FAN POWER: 62.9 BHP @ 240 RPM
AMBIENT AIR: 40°C
EXIT AIR: 58°C

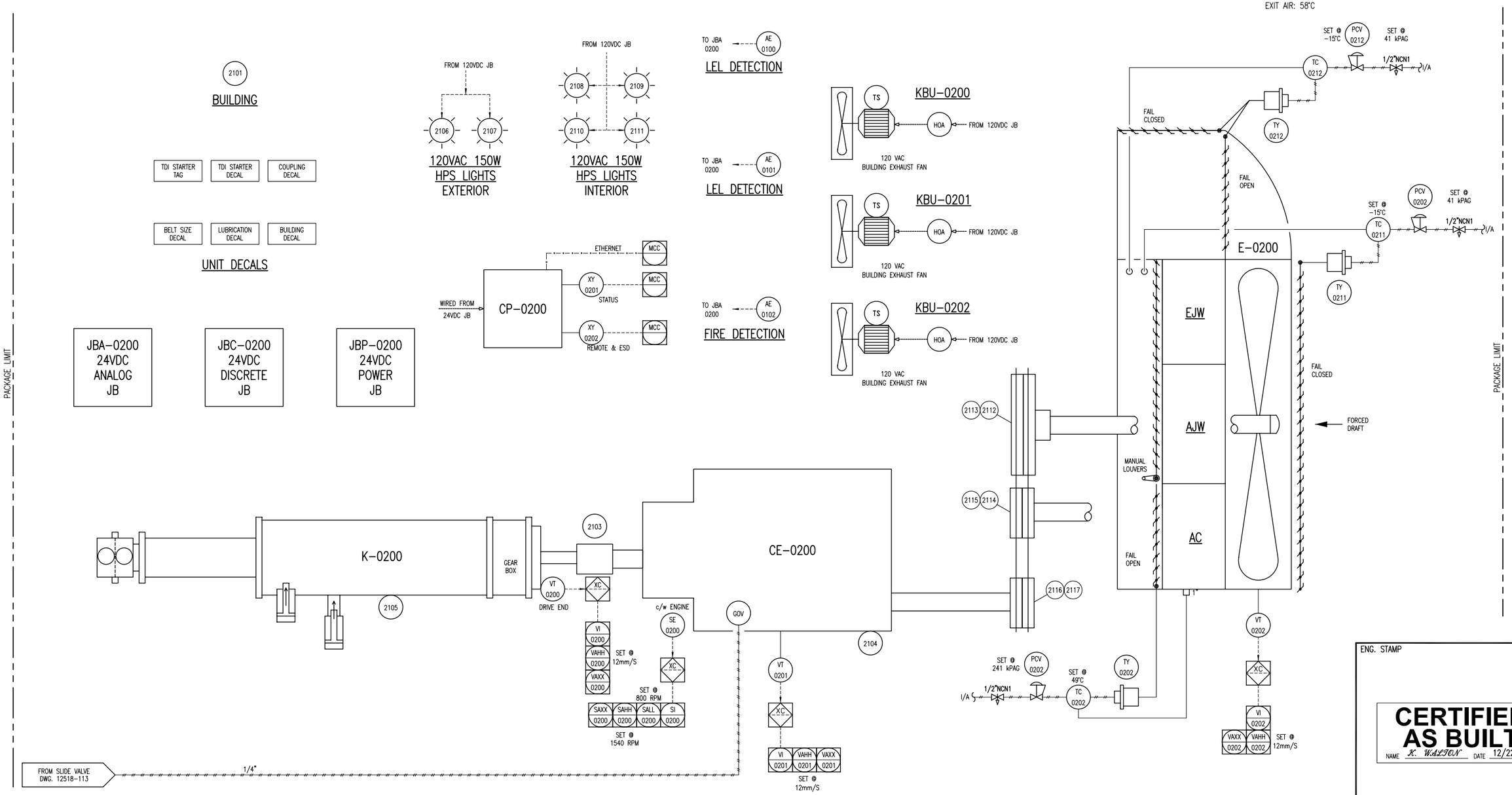

DESTROY PREVIOUS COPIES

NO SWAK ALLOWED

MTR's REQUIRED ON ALL PRESSURE RETAINING PIPE & FITTINGS

REV	DESCRIPTION	DATE	BY	APR
6	AS BUILT	12/22/10	JH	KG
5	GENERAL REVISIONS	SEP 17/10	KW	AR
4	AIR COOLER REVISED	07/21/10	KW	AR
3	ISSUED FOR CONSTRUCTION TO THE SHOP	07/15/10	KW	AR
2	GENERAL REVISIONS	06/30/10	KW	AR
1	ISSUED FOR FABRICATION	06/25/10	KW	AR
A	ISSUED FOR APPROVAL	06/04/10	KW	AR

DATE 12/09/09 | SCALE NTS
DRAWN BY K. WALTON | CHECKED BY A. ROSSS | APPROVED BY A. ROSSS
CUST PO N/A
STEP CODE 111 112 113 142 531 711

PERMIT TO PRACTISE APEGGA PERMIT: No. P8651

FOR HUSKY OIL OPERATIONS
CATERPILLAR G3516LE-AFRC
ARIEL RG357M

ENERFLEX
10121 – BARLOW TRAIL N.E.
CALGARY ALBERTA CANADA

ENG. STAMP

CERTIFIED AS BUILT
NAME K. WALTON DATE 12/22/10

TITLE P & I DIAGRAM DRIVE TRAIN / CONTROL PANEL

DWG NO 12518-112 | SHT 1 | REV 6

THE INFORMATION CONTAINED HEREIN IS THE CONFIDENTIAL PROPERTY OF TORQUMONT ENERGY SYSTEMS AND IS NOT FOR PUBLICATION, AND NO PART THEREOF SHALL BE COPIED OR COMMUNICATED TO A THIRD PARTY WITHOUT AUTHORIZATION FROM TORQUMONT ENERGY SYSTEMS.

PLOT DATE December 22, 2010 P:\10000 Projects\12518 Husky S1340 G3516LE Ariel RG357M\Drafting\PA0\12518-111-AS BUILT.dwg

P-0200
COMPRESSOR LUBE OIL PUMP

MFG: ARIEL (INTEGRAL)
MODEL: P755x3.00
FLOW RATE: 88.4 GPM

FR-0200B
COMPRESSOR BEARING OIL FILTER

MFG: ARIEL
PARTICLE RATING: 6 MICRON

FR-0200A
COMPRESSOR ROTOR OIL FILTER

MFG: ARIEL
PARTICLE RATING: 16 MICRON

FR-0200C
COMPRESSOR PRELUBE OIL FILTER

MFG: PARKER
PARTICLE RATING: 5-7 MICRON

P-0201
COMPRESSOR OIL COOLER PUMP

MFG: TUTHILL
MODEL: 4105V-L-7
MAWP: 1724 KPAG
FLOW: 18 LPM
DRIVER: AIR MOTOR

E-0201
COMPRESSOR OIL COOLER

MFG: GEA
MODEL: FPA10X20-360M
CHANNELS: 90
MAWP - OIL SIDE: 2413 kPAG @ 177°C
MAWP - GLYCOL SIDE: 2413 kPAG @ 177°C

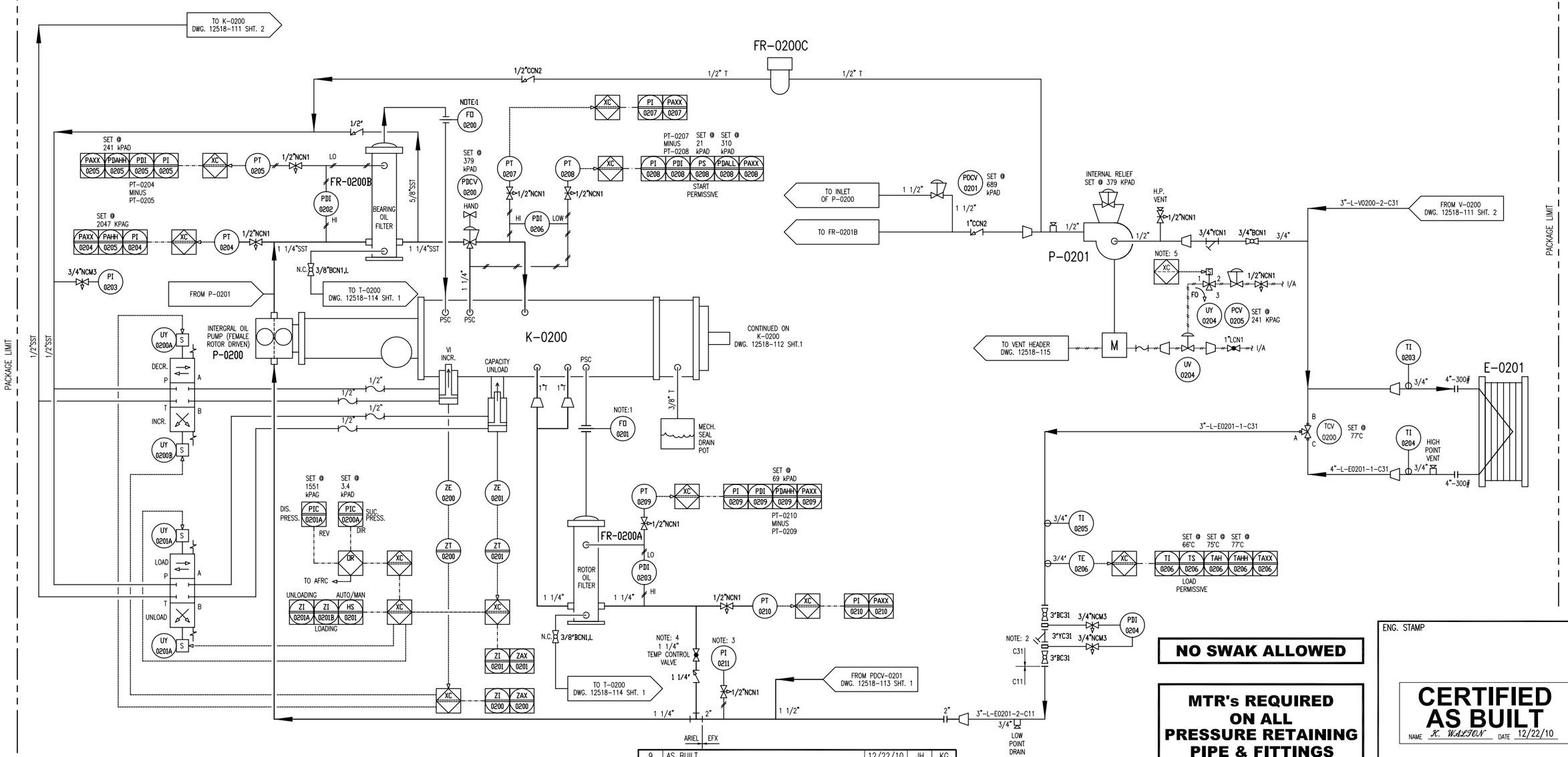

NOTES:
1. ORIFICE SUPPLIED WITH COMPRESSOR.
2. 40 MESH MINIMUM.
3. MOUNT PI-0111 REMOTELY.
4. VALVE IS NORMALLY OPEN; THROTTLE TO ADJUST ROTOR OIL TEMP
5. PRE-LUBE ONLY REQUIRED ON FIRST START ATTEMPT

REV	DESCRIPTION	DATE	BY	APR
9	AS BUILT	12/22/10	JH	KG
8	VALVE ADDED	SEP 17/10	KW	AR
7	PSV-0101 CHANGED TO PDCV-0201	SEP 13/10	KW	AR
6	PUMP VENT DESCRIPTIONS REVISED	SEP 10/10	KW	AR
5	PUMP VENT DESCRIPTIONS REVISED	SEP 02/10	KW	AR
4	GENERAL REVISIONS	AUG 26/10	KW	AR
3	ISSUED FOR CONSTRUCTION TO THE SHOP	07/15/10	KW	AR
2	GENERAL REVISIONS	06/30/10	KW	AR
1	ISSUED FOR FABRICATION	06/25/10	KW	AR
A	ISSUED FOR APPROVAL	06/04/10	KW	AR

DESTROY PREVIOUS COPIES

NO SWAK ALLOWED

MTR's REQUIRED ON ALL PRESSURE RETAINING PIPE & FITTINGS

ENG. STAMP

CERTIFIED AS BUILT
NAME K. WALTON DATE 12/22/10

PERMIT TO PRACTISE: APEGGA PERMIT: No. P8651

DATE 12/09/09		SCALE NTS	
DRAWN BY K. WALTON	CHECKED BY A. ROSSS	APPROVED BY A. ROSSS	
CUST PO N/A			
STEP CODE 113 550			

FOR: HUSKY OIL OPERATIONS CATERPILLAR G3516LE-AFRC ARIEL RG357M

ENERFLEX
10121 - BARLOW TRAIL N.E.
CALGARY ALBERTA CANADA

TITLE: P & I DIAGRAM COMPRESSOR LUBE OIL / UTILITIES

DWG NO 12518-113 | SHT 1 | REV 9

THE INFORMATION CONTAINED HEREIN IS THE CONFIDENTIAL PROPERTY OF TORQMONT ENERGY SYSTEMS AND IS NOT FOR PUBLICATION, AND NO PART THEREOF SHALL BE COPIED OR COMMUNICATED TO A THIRD PARTY WITHOUT AUTHORIZATION FROM TORQMONT ENERGY SYSTEMS.

PLOT DATE December 22, 2010 P:\10000 Projects\12518 Husky 3516LE Ariel RG357M\Drafting\PAID\12518-111-AS BUILT.dwg

T-0200
WASTE OIL TANK
MFG: EFX
CAPACITY: 1281L
SIZE: 24"x8"x480", 3/8" THK
MAT'L: G40.21350W

P-0202
ENGINE PRE-LUBE OIL PUMP
MFG: WARREN RUPP
MODEL: G1FB1ABTXNSX00
INLET GAS PRESSURE: 689 KPAG
FLOW: 95 LPM @ 138 KPGA

P-0203
ENGINE OIL TRANSFER PUMP
MFG: YAMADA
MODEL: NDP-25BAN
INLET GAS PRESSURE: 138-689 KPAG
FLOW: 100 LPM @ 276 KPGA

T-0201
COMPRESSOR/ENGINE OIL DAYTANK
MFG: EFX
CAPACITY: 480L
SIZE: 12"x8"x340", 1/4" THK
MATERIAL: G40.21350W

T-0202
COMPRESSOR/ENGINE OIL DAYTANK
MFG: EFX
CAPACITY: 480L
SIZE: 12"x8"x340", 1/4" THK

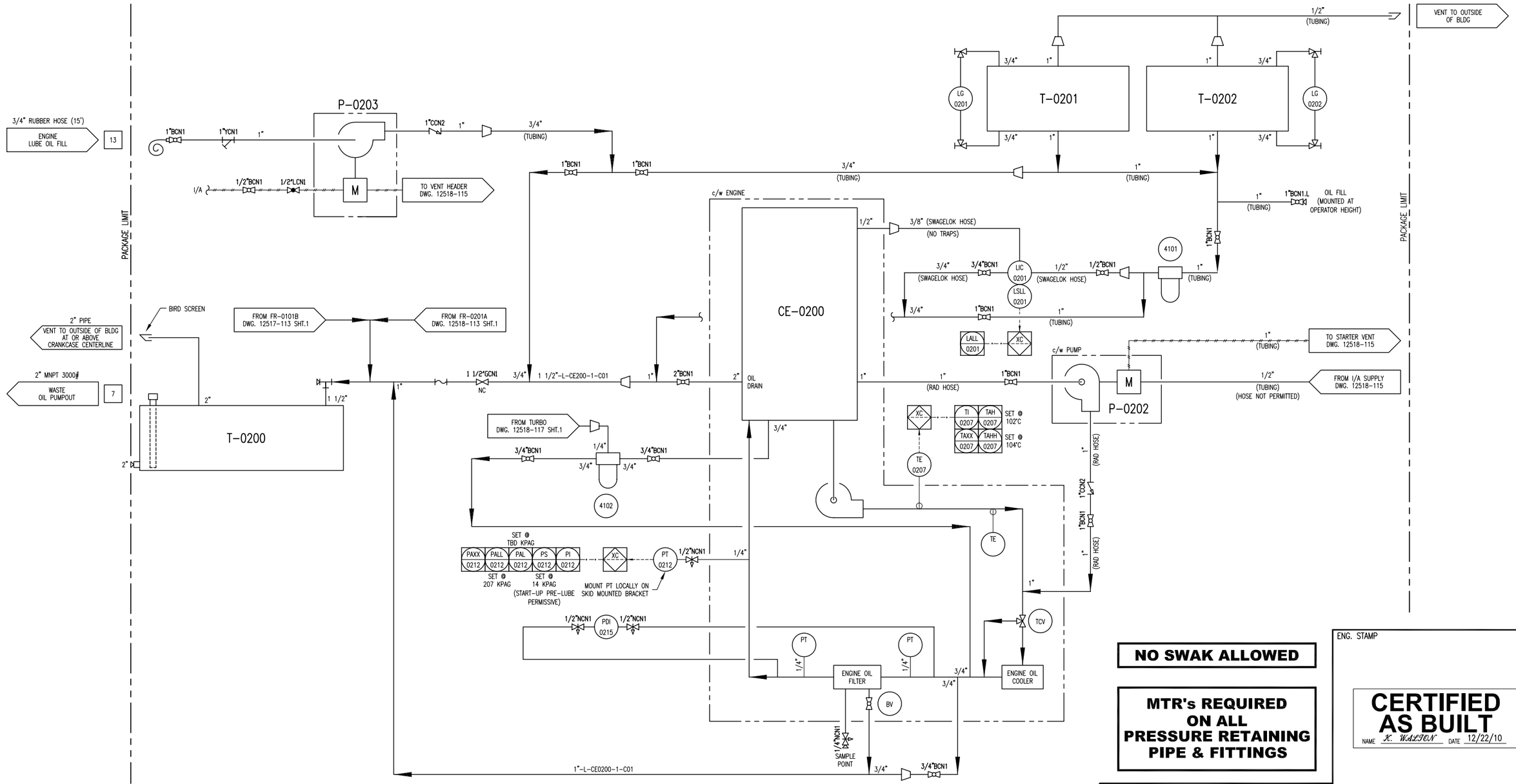

NO SWAK ALLOWED

MTR's REQUIRED ON ALL PRESSURE RETAINING PIPE & FITTINGS

DESTROY PREVIOUS COPIES

REV	DESCRIPTION	DATE	BY	APR
6	AS BUILT	12/22/10	JH	KG
5	TAG ADDED	SEP 17/10	KW	AR
4	PUMP VENT DESCRIPTIONS REVISED/TAG REVISED	SEP 02/10	KW	AR
3	ISSUED FOR CONSTRUCTION TO THE SHOP	07/15/10	KW	AR
2	GENERAL REVISIONS	06/30/10	KW	AR
1	ISSUED FOR FABRICATION	06/25/10	KW	AR
A	ISSUED FOR APPROVAL	06/04/10	KW	AR

DATE 12/09/09 | SCALE NTS
DRAWN BY K. WALTON | CHECKED BY A. ROSSS | APPROVED BY A. ROSSS
CUST PO N/A
STEP CODE 112 540

PERMIT TO PRACTISE APEGGA PERMIT: No. P8651

FOR HUSKY OIL OPERATIONS CATERPILLAR G3516LE-AFRC ARIEL RG357M

ENERFLEX
10121 - BARLOW TRAIL N.E.
CALGARY ALBERTA CANADA

ENG. STAMP
CERTIFIED AS BUILT
NAME K. WALTON DATE 12/22/10

TITLE P & I DIAGRAM ENGINE LUBE OIL

DWG NO 12518-114 | SHT 1 | REV 6

THE INFORMATION CONTAINED HEREIN IS THE CONFIDENTIAL PROPERTY OF TOROMONT ENERGY SYSTEMS AND IS NOT FOR PUBLICATION, AND NO PART THEREOF SHALL BE COPIED OR COMMUNICATED TO A THIRD PARTY WITHOUT AUTHORIZATION FROM TOROMONT ENERGY SYSTEMS.

PLOT DATE December 22, 2010 P:\10000 Projects\12518 Husky S1340 G3516LE Ariel RG357M\Drafting\PA00\12518-111-AS BUILT.dwg

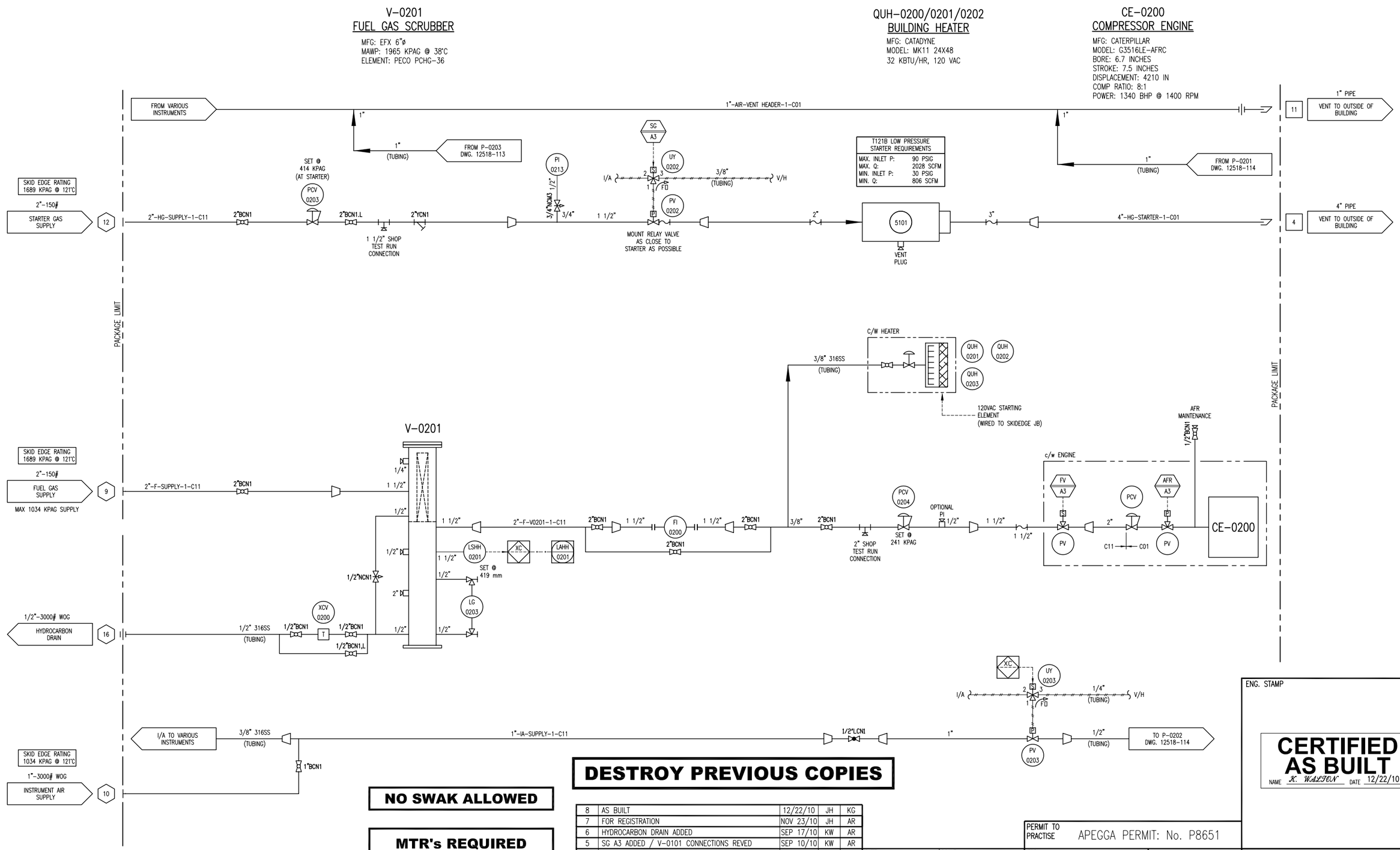

DESTROY PREVIOUS COPIES

NO SWAK ALLOWED

MTR's REQUIRED ON ALL PRESSURE RETAINING PIPE & FITTINGS

REV	DESCRIPTION	DATE	BY	APR
8	AS BUILT	12/22/10	JH	KG
7	FOR REGISTRATION	NOV 23/10	JH	AR
6	HYDROCARBON DRAIN ADDED	SEP 17/10	KW	AR
5	SG A3 ADDED / V-0101 CONNECTIONS REVED	SEP 10/10	KW	AR
4	PUMP VENT DESCRIPTIONS REVISED/TAG REVISED	SEP 02/10	KW	AR
3	ISSUED FOR CONSTRUCTION TO THE SHOP	07/15/10	KW	AR
2	GENERAL REVISIONS	06/30/10	KW	AR
–	–	–	–	–
A	ISSUED FOR APPROVAL	06/04/10	KW	AR

DATE 12/09/09 | SCALE NTS
DRAWN BY K. WALTON | CHECKED BY A. ROSSI | APPROVED BY A. ROSSI
CUST PO N/A
STEP CODE 112 240 244 510

PERMIT TO PRACTISE APEGGA PERMIT: No. P8651

FOR HUSKY OIL OPERATIONS CATERPILLAR G3516LE-AFRC ARIEL RG357M

ENERFLEX
10121 - BARLOW TRAIL N.E.
CALGARY ALBERTA CANADA

ENG. STAMP
CERTIFIED AS BUILT
NAME K. WALTON DATE 12/22/10

TITLE P & I DIAGRAM START / FUEL SUPPLY

DWG NO 12518-115 | SHT 1 | REV 8

THE INFORMATION CONTAINED HEREIN IS THE CONFIDENTIAL PROPERTY OF TOROMONT ENERGY SYSTEMS AND IS NOT FOR PUBLICATION, AND NO PART THEREOF SHALL BE COPIED OR COMMUNICATED TO A THIRD PARTY WITHOUT AUTHORIZATION FROM TOROMONT ENERGY SYSTEMS.

PLOT DATE December 22, 2010 P:\10000 Projects\12518 Husky S1340 G3516LE Ariel RG357M\Drafting\PAID\12518-111-AS BUILT.dwg

T-0203
WASTE GLYCOL TANK
MFG: EFX
CAPACITY: 1281L
SIZE: 24" X 8" X 480", 3/8" THK.
MAT'L: G40.21350W

ECE-0200
GLYCOL HEATER
MFG: KIM HOT START
MODEL: CLER31804
POWER: 480V/3Ph/60Hz
FLOW RATE: 40 GPM

P-0204
GLYCOL TRANSFER PUMP
MFG: YAMADA
MODEL: NDP-25BAN
INLET GAS PRESSURE: 138-689 KPAG
FLOW: 100 LPM @ 276 KPGA

T-0204
GLYCOL (EJW) SURGE TANK
MFG: EFX
CAPACITY: 103L
SIZE: 12" X 12" X 48", 1/4" THK
MAT'L: G40.21350W

EJW (E-0200)
ENGINE JACKET WATER COOLER SECTION
MAWP: 97 KPAG @ 149°C
MDMT: -29°C @ 97 KPAG

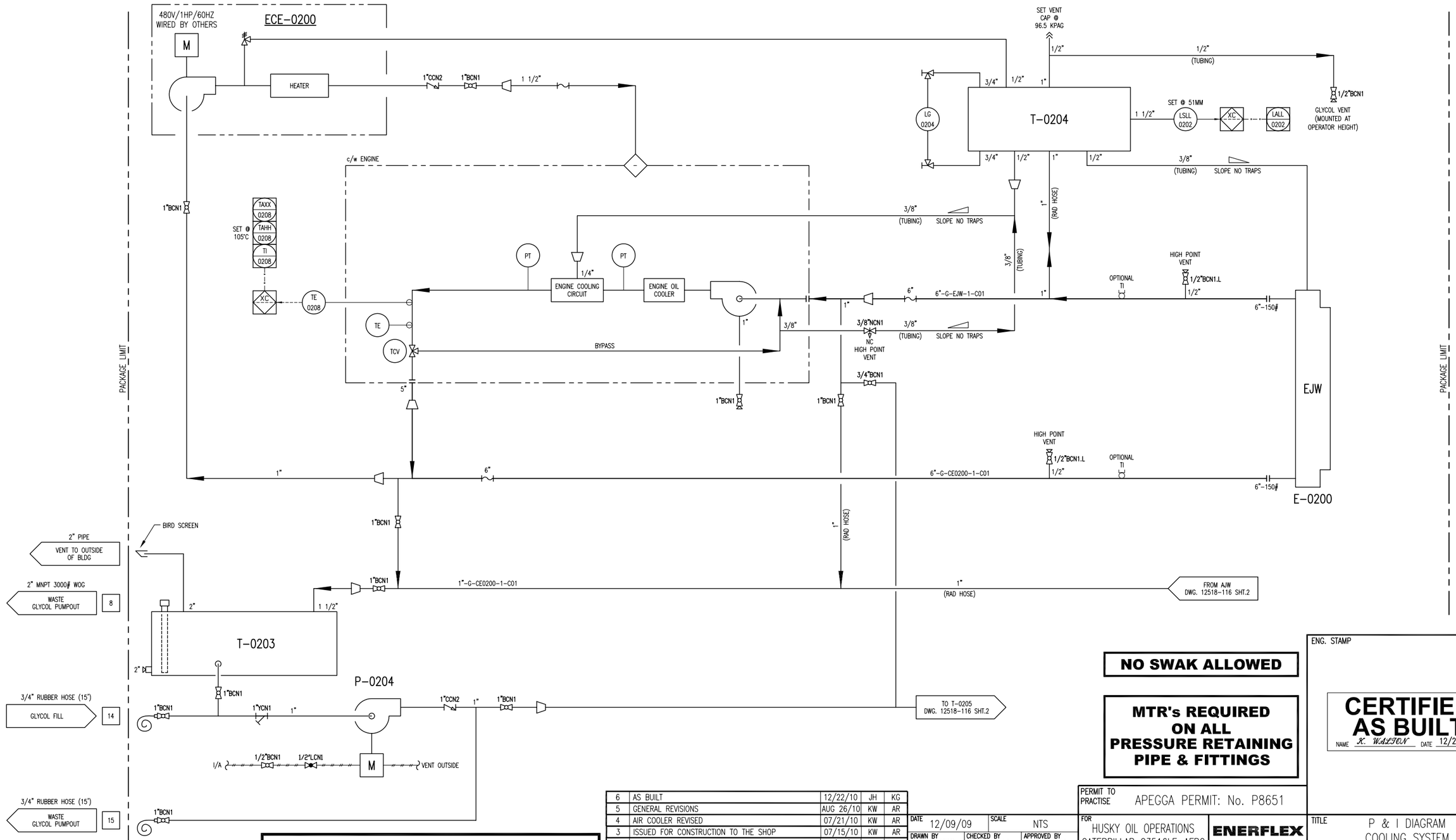

NO SWAK ALLOWED

MTR's REQUIRED ON ALL PRESSURE RETAINING PIPE & FITTINGS

DESTROY PREVIOUS COPIES

REV	DESCRIPTION	DATE	BY	APR
6	AS BUILT	12/22/10	JH	KG
5	GENERAL REVISIONS	AUG 26/10	KW	AR
4	AIR COOLER REVISED	07/21/10	KW	AR
3	ISSUED FOR CONSTRUCTION TO THE SHOP	07/15/10	KW	AR
2	GENERAL REVISIONS	06/30/10	KW	AR
1	ISSUED FOR FABRICATION	06/25/10	KW	AR
A	ISSUED FOR APPROVAL	06/04/10	KW	AR

DATE 12/09/09 | SCALE NTS
DRAWN BY K. WALTON | CHECKED BY A. ROSSS | APPROVED BY A. ROSSS
CUST PO N/A
STEP CODE 112 412 521

PERMIT TO PRACTISE APEGGA PERMIT: No. P8651

FOR HUSKY OIL OPERATIONS CATERPILLAR G3516LE-AFRC ARIEL RG357M

ENERFLEX
10121 - BARLOW TRAIL N.E.
CALGARY ALBERTA CANADA

ENG. STAMP

CERTIFIED AS BUILT
NAME K. WALTON DATE 12/22/10

TITLE P & I DIAGRAM COOLING SYSTEM ENGINE JACKET WATER

DWG NO 12518-116 | SHT 1 | REV 5

PLOT DATE December 22, 2010 P:\10000 Projects\12518 Husky S1340 G3516LE Ariel RG357M\Drafting\PAID\12518-111-AS BUILT.dwg

THE INFORMATION CONTAINED HEREIN IS THE CONFIDENTIAL PROPERTY OF TOROMONT ENERGY SYSTEMS AND IS NOT FOR PUBLICATION, AND NO PART THEREOF SHALL BE COPIED OR COMMUNICATED TO A THIRD PARTY WITHOUT AUTHORIZATION FROM TOROMONT ENERGY SYSTEMS.

E-0201
COMPRESSOR OIL COOLER
SEE DWG. #12518-113

T-0205
GLYCOL (AJW) SURGE TANK
MFG: EFX
CAPACITY: 103L
SIZE: 12" X 12" X 48", 1/4" THK
MAT'L: G40.21350W

AJW (E-0200)
AUXILIARY JACKET WATER
COOLER SECTION
MAWP: 97 KPAG @ 149°C
MDMT: -29°C @ 97 KPAG

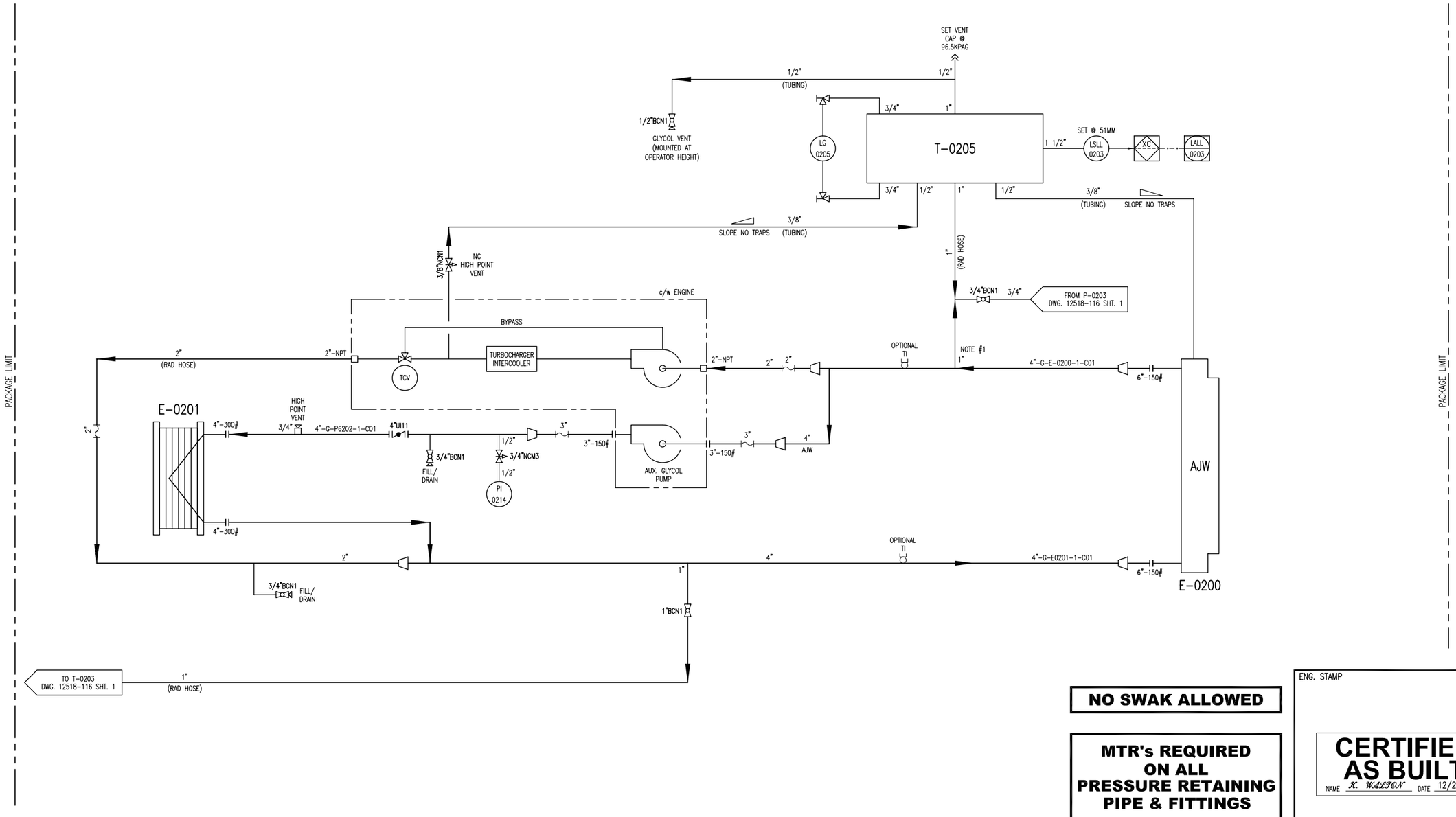

NOTES:
1. LOCATE STATIC HEAD CONNECTION CLOSE TO PUMP INLET.

NO SWAK ALLOWED

MTR's REQUIRED ON ALL PRESSURE RETAINING PIPE & FITTINGS

ENG. STAMP

CERTIFIED AS BUILT
NAME K. WALTON DATE 12/22/10

REV	DESCRIPTION	DATE	BY	APR
5	AS BUILT	12/22/10	JH	KG
4	AIR COOLER REVISED	07/21/10	KW	AR
3	ISSUED FOR CONSTRUCTION TO THE SHOP	07/15/10	KW	AR
2	GENERAL REVISIONS	06/30/10	KW	AR
1	ISSUED FOR FABRICATION	06/25/10	KW	AR
A	ISSUED FOR APPROVAL	06/04/10	KW	AR

DATE 12/09/09 SCALE NTS
DRAWN BY K. WALTON CHECKED BY A. ROSSS APPROVED BY A. ROSSS
CUST PO N/A
STEP CODE 412 521

PERMIT TO PRACTISE APEGGA PERMIT: No. P8651

FOR HUSKY OIL OPERATIONS CATERPILLAR G3516LE-AFRC ARIEL RG357M

ENERFLEX
10121 - BARLOW TRAIL N.E.
CALGARY ALBERTA CANADA

TITLE P & I DIAGRAM COOLING SYSTEM AUXILIARY JACKET WATER

DWG NO 12518-116 SHT 2 REV 5

THE INFORMATION CONTAINED HEREIN IS THE CONFIDENTIAL PROPERTY OF TORQMONT ENERGY SYSTEMS AND IS NOT FOR PUBLICATION, AND NO PART THEREOF SHALL BE COPIED OR COMMUNICATED TO A THIRD PARTY WITHOUT AUTHORIZATION FROM TORQMONT ENERGY SYSTEMS.

PLOT DATE December 22, 2010 P:\10000 Projects\12518 Husky S1340 G3516LE Ariel RG357M\Drafting\PAID\12518-111-AS BUILT.dwg

7103
EXHAUST SILENCER

MFG: SILEX
MODEL: JDDS-14
GRADE: HOSPITAL

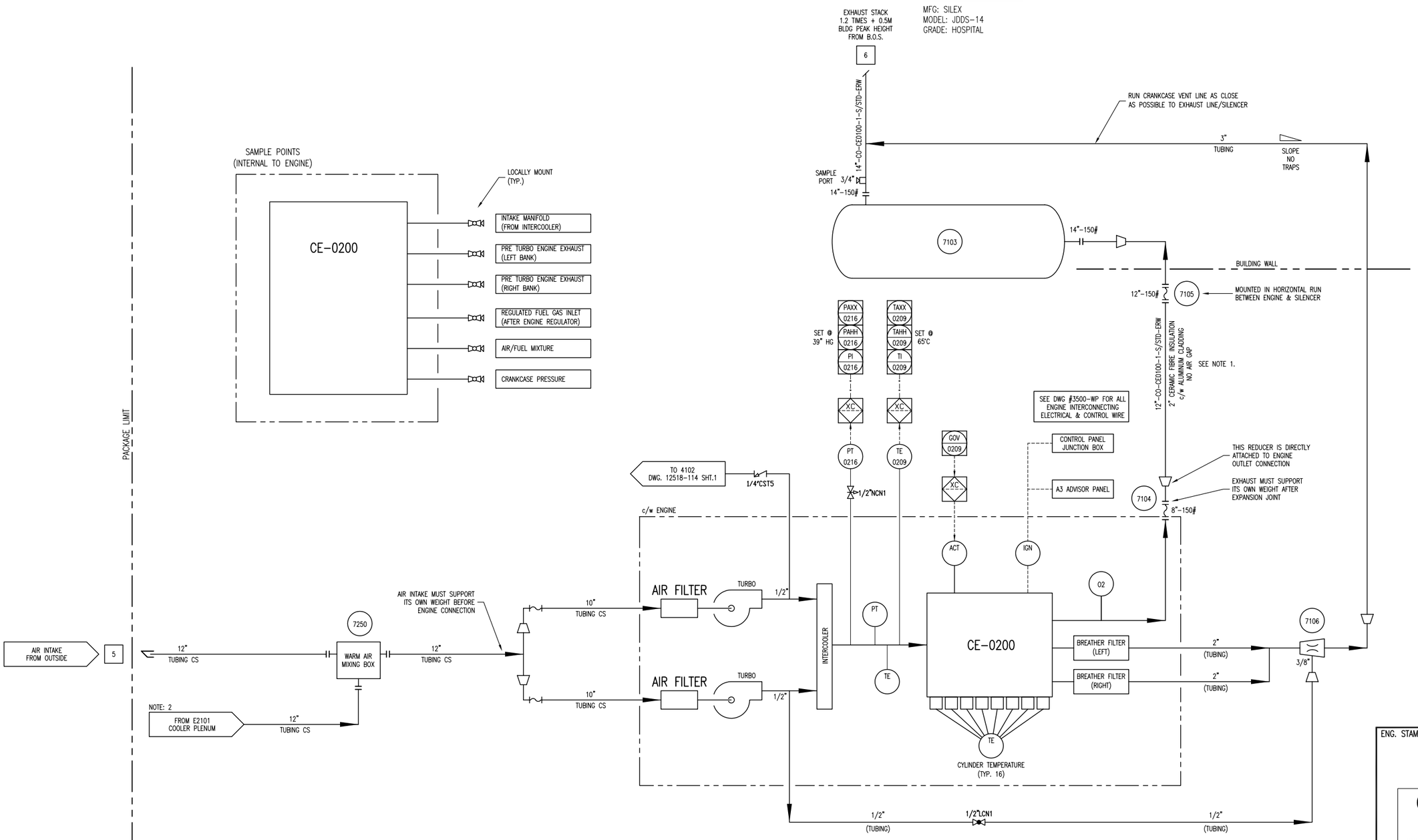

NO SWAK ALLOWED

MTR's REQUIRED ON ALL PRESSURE RETAINING PIPE & FITTINGS

DESTROY PREVIOUS COPIES

NOTES:
1. INSULATION FROM ENGINE EXHAUST TO BUILDING WALL.
2. TAKE WARM AIR FROM BOTTOM OF COOLER PLENUM.

REV	DESCRIPTION	DATE	BY	APR
5	AS BUILT	12/22/10	JH	KG
4	GENERAL REVISIONS	AUG 26/10	KW	AR
3	ISSUED FOR CONSTRUCTION TO THE SHOP	07/15/10	KW	AR
2	GENERAL REVISIONS	06/30/10	KW	AR
1	ISSUED FOR FABRICATION	06/25/10	KW	AR
A	ISSUED FOR APPROVAL	06/04/10	KW	AR

DATE 12/09/09 | SCALE NTS
DRAWN BY X. WALTON | CHECKED BY A. ROSSI | APPROVED BY A. ROSSI
CUST PO N/A
STEP CODE 112 531

PERMIT TO PRACTISE APEGGA PERMIT: No. P8651

FOR HUSKY OIL OPERATIONS
CATERPILLAR G3516LE-AFRC
ARIEL RG357M

ENERFLEX
10121 - BARLOW TRAIL N.E.
CALGARY ALBERTA CANADA

TITLE P & I DIAGRAM
AIR INTAKE & EXHAUST

DWG NO 12518-117 | SHT 1 | REV 5

ENG. STAMP

CERTIFIED AS BUILT
NAME X. WALTON DATE 12/22/10

THE INFORMATION CONTAINED HEREIN IS THE CONFIDENTIAL PROPERTY OF TOROMONT ENERGY SYSTEMS AND IS NOT FOR PUBLICATION, AND NO PART THEREOF SHALL BE COPIED OR COMMUNICATED TO A THIRD PARTY WITHOUT AUTHORIZATION FROM TOROMONT ENERGY SYSTEMS.

PLOT DATE December 22, 2010 P:\10000 Projects\12518 Husky S1340 G3516LE Ariel RG357M\Drafting\P&ID\12518-111-AS BUILT.dwg

LINE IDENTIFICATION

A–B–CD–E–FGHI–J,J,J

A: NOMINAL LINE SIZE IN INCHES

B: FLUID

A	AMMONIA	L	LUBE OIL
C	CARBON DIOXIDE	N	NATURAL GAS
CO	CARBON MONOXIDE	O	OXYGEN
F	FUEL GAS	P	PROPANE
G	GLYCOL	PG	PURGE GAS
HG	HYDROCARBON GAS	S	STEAM
HL	HYDROCARBON LIQUID	SG	SYNGAS
IA	INSTR. AIR SUPPLY	V	WASTE PROCESS WATER
IG	INSTR. GAS SUPPLY	W	WATER

C: EQUIPMENT TYPE

AC	AFTER COOLER	IC	INTERSTAGE COOLER
B	BLOWER/FAN	M	MOTOR
C	COMPRESSOR	P	PUMP
E	EXCHANGER	S	OIL SKIMMER
F	FILTER	T	TANK
H	HEATER	V	PRESSURE VESSEL

D: EQUIPMENT NUMBER 1 TO 9 SEQUENTIAL NUMBERS

E: LINE NUMBER 1 TO 9 SEQUENTIAL NUMBERS FROM EQUIPMENT

FGHI: PIPING SPECIFICATION

F: MATERIAL GROUP
- C CARBON STEEL
- L LOW TEMPERATURE CARBON STEEL
- S STAINLESS STEEL

G: FLANGE CLASS (ANSI 16.5)

1	150#	9	900#
3	300#	15	1500#
6	600#	25	2500#

H: LINE MATERIAL SPECIFICATION REFERENCE
1 TO 9 SEQUENTIAL NUMBERS

I: SPECIFICATION REFERENCE
- R RECIPROCATING SPECIFICATION
- BLANK SCREW SPECIFICATION

JJJ: MODIFIER / GENERAL

H	HOT INSULATION	THICKNESS IN INCHES
C	COLD INSULATION	THICKNESS IN INCHES
PP	PERSONAL PROTECTION	THICKNESS IN INCHES
HT	HEAT TRACING	
ST	STEAM TRACING	
GT	GLYCOL TRACING	
ET	ELECTRICAL TRACING	

EXAMPLE: 3"–A–V401–2–C11R–ET,1"

3"	LINE–SIZE
A	AMMONIA
V401	OIL SEPARATOR
2	SECOND LINE FROM VESSSEL
C11R	C CARBON STEEL LINE
	1 150# ANSI FLANGE RATING
	1 LINE MATERIAL SPECIFICATION REFERENCE
	R RECIPROCATING SPECIFICATION REFERENCE
ET,1"	ELECTRICAL TRACING, 1" THICK INSULATION

VALVE IDENTIFICATION

A"BCDE.F

A: NOMINAL VALVE SIZE IN INCHES

B: TYPE

A	ANGLE GLOBE	M	MANIFOLD
B	BALL	N	NEEDLE
C	CHECK	P	PLUG
G	GATE	S	STRAINER
L	GLOBE	U	BUTTERFLY

C: BODY MATERIAL

B	BRONZE	L	LOW TEMP. CARBON STEEL
C	CARBON STEEL	S	STAINLESS STEEL
I	CAST IRON		

D: END CONNECTIONS

1	FLANGED 150#	B	BUT WELD
3	FLANGED 300#	C	SW BY NPT
6	FLANGED 600#	F	NPT BY FLANGE MANIFOLD)
9	FLANGED 900#	N	NPT (SCREWED)
15	FLANGED1500#	M	NPT MALE BY NPT FEMALE
25	FLANGED 2500#	S	SW (SOCKETWELD)
		T	TUBE (SWAGELOCK)

E: IDENTIFIER – NUMBER USED TO SPECIFY VALVE REFER TO VALVE DATA SHEETS

F: MODIFIER

C	CHAIN OPERATOR	O	OXYGEN SERVICE/CLEANING
E	EXTENDED BONNET	P	FULL PORT DESIGN
G	GEAR OPERATOR	R	RTJ FLANGED
L	LOCKING DEVICE	S	SPRING HANDLE (CLOSE)
N	NACE TRIM	X	SPECIAL SPECIFICATIONS

EXAMPLE: 6"GC11.C

6"	VALVE SIZE	C	CARBON STEEL	1	API–600
G	GATE	1	FLANGED 150#	C	CHAIN OPERATOR

CONTROL VALVES

- POSITIONER DIAPHRAGM CONTROL VALVE
- FLOW — OUTLET PRESSURE REGULATOR SELF–CONTAINED
- FLOW — INLET PRESSURE REGULATOR SELF–CONTAINED
- PRESSURE DIFFERENTIAL CONTROL VALVE SELF–CONTAINED
- DIAPHRAGM CONTROL VALVE
- HYDRAULIC / PNEUMATIC PISTON OPERATED
- TWO–WAY SOLENOID VALVE
- THREE–WAY SOLENOID VALVE
- MOTOR ACTUATOR
- HAND CONTROL VALVE
- PRESSURE SAFETY / RELIEF VALVE
- X — DESIGNATES ORIFICE LETTER (SIZE)

MISCELLANEOUS

- CUSTOMER SKID TIE–POINTS
- SKID EDGE NOT REQ'D CUSTOMER TIE–IN
- T — CONTINUOUS LIQUID DRAINER OR STEAM TRAP
- FLEXIBLE/ EXPANSION CONNECTION
- SPECTACLE BLIND (LINE OPEN)
- SPECTACLE BLIND (LINE CLOSED)
- BALL CHECK VALVE
- THROTTLE BLOCK
- ORIFICE
- CONE STRAINER
- BASKET STRAINER
- Y–PATTERN STRAINER
- TEE STRAINER
- OPEN DRAIN
- SPACER / FUTURE ORIFICE
- UNION
- SIGHT GLASS
- LINE SIZE CHANGE
- SP 0000 — SPECIALTY ITEM
- THICKNESS → IN/C — INSULATION – (C) COLD (H) HOT (HT) HEAT TRACING (PP) PERSONNEL PROTECTION
- IN/C — ELECTRIC HEAT TRACE
- IN/C — STEAM OR GLYCOL HEAT TRACE
- VORTEX BREAKER
- DIAPHRAGM SEAL
- RUPTURE DISC FOR PRESSURE RELIEF
- RUPTURE DISC FOR VACUUM RELIEF
- VENTURI

LINE CODE

- MAIN PROCESS LINE
- SECONDARY PROCESS LINE
- AUXILIARY LINE
- INSTRUMENT LINE
- ELECTRIC LINE
- FILLED CAPILLARY TUBE
- PNEUMATIC LINE
- MECHANICAL LINK
- INSTRUMENT DATA LINK
- INTERCONNECTING PIPING
- SKID LIMIT
- FUTURE

VALVES

- ANGLE GLOBE VALVE
- BALL VALVE
- BUTTERFLY VALVE
- CHECK VALVE
- GATE VALVE
- GLOBE VALVE
- NEEDLE VALVE
- NEEDLE VALVE W/ BLEED PLUG
- PLUG VALVE
- 3–WAY VALVE
- 4–WAY VALVE

VALVE CONNECTIONS

- SCREWED (NPT)
- SOCKET WELDED (SW)
- BUTT WELDED (BW)
- FLANGED
- NPT BY SW

INSTRUMENTS

- LOCAL MOUNTED
- LOCAL PANEL MOUNTED
- MOUNTED BEHIND OR IN LOCAL PANEL
- MAIN PANEL MOUNTED
- MOUNTED BEHIND OR IN MAIN PANEL
- BY OTHERS
- HUMAN MACHINE INTERFACE(HMI) ACCESSIBLE TO OPERATOR
- HUMAN MACHINE INTERFACE(HMI) ACCESSIBLE TO OPERATOR THROUGH LOCAL PLC
- BY OTHERS
- XXX / A3 — CAT ADEM III INTERNAL SIGNAL
- XC — PROGRAMMABLE LOGIC CONTROLLER (PLC) XC REPRESENTS GENERAL LOGIC
- XL* — PILOT LIGHT * COLOR–(A) AMBER (G) GREEN (R) RED (B) BLUE (O) ORANGE (W) WHITE
- I — INTERLOCK
- E — ELECTRICAL (HARD WIRE) INTERLOCK
- THERMOWELL (FLANGED)
- THERMOWELL (THREADED)
- THERMOWELL (WELDED)

INSTRUMENT IDENTIFICATION GENERAL REFERENCE (ISA – S5.1)

	(MODIFIER)												
	FIRST LETTER	SUCCEEDING LETTERS	PRIMARY ELEMENT	INDICATOR	RECORDER	CONTROLLER BLIND	CONTROLLER INDICATING	CONTROLLER RECORDING	TRANS–MITTER	CONTROL SWITCH	CONTROL ALARM	CONTROL VALVE OR REGULATOR	SELF–ACTUATED VALVE	RELAY OR CONVERTER
A	ANALYSIS	ALARM	AE	AI	AR	AC	AIC	ARC	AT	AS( )	AA( )	AV		AY
B	BURNER FLAME	USER'S CHOICE	BE	BI	BR	BC			BT	BS( )	BA( )	BV		BY
C	CONDUCTIVITY	CONTROL (CLOSE)	CE	CI	CR	CC	CIC	CRC	CT	CS( )	CA( )	CV		CY
D	DENSITY OR MASS (DIFFERENTIAL)		DE	DI	DR	DC	DIC	DRC	DT	DS( )	DA( )	DV		DY
E	VOLTAGE	PRIMARY ELEMENT	EE	EI	ER	EC	EIC	ERC	ET	ES( )	EA)	EV		EY
F	FLOW (RATIO OR FRACTION)	SHUTDOWN FIRST OUT	FE	FI	FR	FC	FIC	FRC	FT	FS( )	FA)	FV	FCV	FY
G	GAUGING	GLASS	GE	GI	GR	GC	GIC	GRC	GT	GS( )	GA)	GV		
H	HAND	(HIGH)				HC	HIC		HT	HS( )		HV	HCV	HY
I	CURRENT	INDICATE	IE	II	IR	IC	IIC	IRC	IT	IS( )	IA( )			IY
J	POWER (SCAN)		JE	JI	JR	JC	JIC	JRC	JT	JS( )	JA( )			JY
K	TIME	CONTROL STATION		KI	KR	KC	KIC	KRC	KT	KS( )	KA( )			KY
L	LEVEL	LIGHT (LOW)	LE	LI	LR	LC	LIC	LRC	LT	LS( )	LA( )	LV	LCV	LY
M	MOISTURE, HUMIDITY	(MIDDLE OR INTERMEDIATE)	ME	MI	MR	MC	MIC	MRC	MT	MS( )	MA( )	MV		MY
N	USER'S CHOICE													
O	POINT	ORIFICE (OPEN)												
P	PRESSURE OR VACUUM	POINT	PE	PI	PR	PC	PIC	PRC	PT	PS( )	PA( )	PV	PCV	PY
Q	QUANTITY OR EVENT (INTEGRATE/TOTALIZE)			QI	QR	QC	QIC	QRC	QT	QS( )	QA( )	QV		QY
R	RADIOACTIVITY	RECORD OR PRINT	RE	RI	RR	RC	RIC	RRC	RT	RS( )	RA( )			RY
S	SPEED OR FREQUENCY	SWITCH		SI	SR	SC	SIC	SRC	ST	SS( )	SA)			SY
T	TEMPERATURE	TRANSMIT	TE	TI	TR	TC	TIC	TRC	TT	TS( )	TA( )	TV	TCV	TY
U	MULTI–VARIABLE	MULTI–FUNCTION		UI	UR	UC	UIC	URC				UV		
V	VISCOSITY OR VIBRATION	VALVE OR DAMPER	VE	VI	VR	VC	VIC	VRC	VT	VS( )	AA( )	VV		VY
W	WEIGHT OR FORCE	WELL	WE	WI	WR	WC	WIC	WRC	WT	WS( )	AA( )	WV		WY
X	UNCLASSIFIED	UNCLASSIFIED (DIAGNOSTIC)	XE	XI	XR	XC	XIC	XRC	XT	XS( )	SA( )	XV		XY
Y	USER'S CHOICE	RELAY OR COMPUTE												YY
Z	POSITION	DRIVE OR ACTUATE	ZE	ZI	ZR	ZC	ZIC	ZRC	ZT	ZS( )	ZA( )			ZY

(C) –CLOSE (O) –OPEN
(H) –HIGH ALARM (L) –LOW ALARM
(HH)–HIGH SHUTDOWN (LL)–LOW SHUTDOWN

(XX) –DIAGNOSTIC SHUTDOWN (USED TO INDICATE THE DIAGNOSTIC CHECK REQ'D ON THE ANALOG INPUT)

ABBREVIATIONS

BW	BUTT WELD	NC	NORMALLY CLOSED
CA	CORROSION ALLOWANCE	NO	NORMALLY OPEN
CS	CARBON STEEL	NPT	NATIONAL PIPE THREAD (SCREWED)
C/W	COMPLETE WITH	PB	PUSH BUTTON
CSC	CAR SEALED CLOSED	PL	PILOT LIGHT
CSO	CAR SEALED OPEN	PLC	PROGRAMMABLE LOGIC CONTROLLER
CUST	CUSTOMER	REV	REVERSE ACTING
DB	DEAD BAND	RF	RAISED FACE
Δ	DELTA (DIFFERENTIAL)	RTD	RESISTANCE TEMPERATURE DEVICE
DIR	DIRECT ACTING	RTJ	RING TYPE JOINT
ESD	EMERGENCY SHUTDOWN	S/F	SEAM TO FACE OF FLANGE
FC	FAIL CLOSED	SS	STAINLESS STEEL
FF	FLAT FACED	S/S	SEAM TO SEAM
FO	FAIL OPEN	SO	SLIP–ON
FLP	FAIL LAST POSITION	SW	SOCKET WELD
FX	FROST EXTENSION	SVU	SUCTION VALVE UNLOADER
FOT	FLAT ON TOP	T	TUBING
HI	HIGH	TESI	TOROMONT ENERGY SYSTEMS INC.
HLL	HIGH LIQUID LEVEL	V/H	VENT HEADER
HS	HAND SWITCH	VTA	VENT TO ATMOSHPERE
I/A	INSTRUMENT AIR	VVCP	VARIABLE VOLUME CONTROL POCKET
I/G	INSTRUMENT GAS	FVCP	FIXED VOLUME CONTROL POCKET
I/P	CURRENT TO PRESSURE	W/	WITH
I/O	INPUT / OUTPUT	W/O	WITHOUT
LLL	LOW LIQUID LEVEL		
LPD	LOW POINT DRAIN		
MAX	MAXIMUM		
MAWP	MAXIMUM ALLOWABLE WORKING PRESSURE		
MDMT	MAXIMUM DESIGN METAL TEMPERATURE		
MCC	MOTOR CONTROL CENTER		
MIN	MINIMUM		
NLL	NORMAL LIQUID LEVEL		

ENG. STAMP

CERTIFIED AS BUILT
NAME K. WALTON DATE 12/22/10

REV	DESCRIPTION	DATE	BY	APR
4	AS BUILT	12/22/10	JH	KG
3	ISSUED FOR CONSTRUCTION TO THE SHOP	07/15/10	KW	AR
2	GENERAL REVISIONS	06/30/10	KW	AR
1	ISSUED FOR FABRICATION	06/25/10	KW	AR
A	ISSUED FOR APPROVAL	06/04/10	KW	AR

DATE 12/09/09 | SCALE NTS
DRAWN BY K. WALTON | CHECKED BY A. ROSSI | APPROVED BY A. ROSSI
CUST PO N/A
STEP CODE 112 531

PERMIT TO PRACTISE APEGGA PERMIT: No. P8651

FOR HUSKY OIL OPERATIONS CATERPILLAR G3516LE–AFRC ARIEL RG357M

ENERFLEX
10121 – BARLOW TRAIL N.E.
CALGARY ALBERTA CANADA

TITLE LEGEND

DWG NO 12518–199 | SHT 1 | REV 4

THE INFORMATION CONTAINED HEREIN IS THE CONFIDENTIAL PROPERTY OF TOROMONT ENERGY SYSTEMS AND IS NOT FOR PUBLICATION, AND NO PART THEREOF SHALL BE COPIED OR COMMUNICATED TO A THIRD PARTY WITHOUT AUTHORIZATION FROM TOROMONT ENERGY SYSTEMS.

P:\0000 Projects\12518 Husky S1340 G3516LE Ariel RG357M\Drafting\PAID\12518-111-AS BUILT.dwg
PLOT DATE December 22, 2010

FLOW DIAGRAM	LINE NUMBER	SERVICE	SIZE (INCH)	FROM	TO	TESI PIPE SPEC	WALL THICKNESS (SCHEDULE)	DESIGN PRESSURE (KPA)	DESIGN TEMP. (Deg. C)	CORROSION ALLOWANCE (mm)	TEST PRESSURE (KPA)	X-RAY	NOTES	PIPE MATERIAL	FLANGE MATERIAL	CODE	PWHT
12518-111-1	12"-AIR-INLET-1-C01	NORMAL FLUID (AIR)	12	AIR INLET	WARM AIR MIXING BOX	C01	STD	103	-29/121	1.5875	NA	NA	4	SA-106-B	SA-105	N/A	NO
12518-111-1	12"-AIR-INLET-2-C01	NORMAL FLUID (AIR)	12	WARM AIR MIXING BOX	FR-0200A INLET FR-0200B INLET	C01	STD	103	-29/121	1.5875	NA	NA	4	SA-106-B	SA-105	N/A	NO
12518-111-1	12"-AIR-FR0200-1-C01	NORMAL FLUID (AIR)	12	FR-0200A OUTLET FR-0200B OUTLET	12"-AIR-FR0200-2-C01	C01	STD	103	-29/121	1.5875	NA	NA	4	SA-106-B	SA-105	N/A	NO
12518-111-2	12"-AIR-FR0200-2-C01	NORMAL FLUID (AIR)	12	12"-AIR-FR0200-1-C01	12"-AIR-FR0200-1-C31	C01	STD	103	-29/121	1.5875	NA	NA	4	SA-106-B	SA-105	N/A	NO
12518-111-2	12"-AIR-FR0200-1-C31	NORMAL FLUID (AIR)	12/16	12"-AIR-FR0200-2-C01	K-0200 INLET	C31	STD	2068	-29/121	1.5875	3102	10%	1, 3	SA-106-B	SA-105	B31.3	NO
12518-111-2	10"-AIR-K0200-1-C31	NORMAL FLUID (AIR)	10	K-0200 OUTLET	V-0200 INLET	C31	STD	2068	-29/121	1.5875	3102	10%	1, 3	SA-106-B	SA-105	B31.3	NO
12518-111-2	10"-AIR-V0200-1-C31	NORMAL FLUID (AIR)	10	V-0200 OUTLET	10"-AIR-V0200-1-L31	C31	STD	2068	-29/121	1.5875	3102	10%	1, 3	SA-106-B	SA-105	B31.3	NO
12518-111-2	10"-AIR-V0200-1-L31	NORMAL FLUID (AIR)	6/10	10"-AIR-V0200-1-C31	E-0200 INLET	L31	STD	2068	-45/121	1.5875	3102	10%	1, 3	SA-333 Grade 6	SA-350-LF2	B31.3	NO
12518-111-2	8"-AIR-AC-1-L31	NORMAL FLUID (AIR)	6/8	E-0200 OUTLET	8"-AIR-AC-1-C31	L31	STD	2068	-45/121	1.5875	3102	10%	1, 3	SA-333 Grade 6	SA-350-LF2	B31.3	NO
12518-111-1/2	8"-AIR-AC-1-C31	NORMAL FLUID (AIR)	2/8	8"-AIR-AC-1-L31	8"-AIR-AC-2-C31	C31	STD	2068	-29/121	1.5875	3102	10%	1, 3	SA-106-B	SA-105	B31.3	NO
12518-111-1	8"-AIR-AC-2-C31	NORMAL FLUID (AIR)	3/8	8"-AIR-AC-1-C31	1"-AIR-AC-3-C31 8"-AIR-AC-2-L31	C31	STD	2068	-29/121	1.5875	3102	10%	1, 3	SA-106-B	SA-105	B31.3	NO
12518-111-1	8"-AIR-AC-2-L31	NORMAL FLUID (AIR)	8	8"-AIR-AC-2-C31	AIR OUTLET	L31	STD	2068	-45/121	1.5875	3102	10%	1, 3	SA-333 Grade 6	SA-350-LF2	B31.3	NO
12518-111-1	1"-AIR-AC-3-C31	NORMAL FLUID (AIR)	1	8"-AIR-AC-2-C31	PV-0207 INLET	C31	STD	2068	-29/121	1.5875	2275	10%	2	SA-106-B	SA-105	B31.3	NO
12518-111-2	3"-L-V0200-2-C31	NORMAL FLUID (OIL)	3/4	V-0200 OUTLET	E-0202 INLET	C31	STD	2068	-29/121	1.5875	2275	10%	2, 3	SA-106-B	SA-105	B31.3	NO
12518-113-1	4"-L-E0201-1-C31	NORMAL FLUID (OIL)	3 / 4	E-0201 OUTLET	TCV-0200 INLET	C31	STD / STD	2068	-29/121	1.5875	2275	10%	2, 3	SA-106-B	SA-105	B31.3	NO
12518-113-1	3"-L-E0201-1-C31	NORMAL FLUID (OIL)	2/3	TCV-0200 OUTLET	3"-L-E0201-2-C11	C31	STD	2068	-29/121	1.5875	2275	10%	2, 3	SA-106-B	SA-105	B31.3	NO
12518-116-1	6"-G-CE0200-1-C01	NORMAL FLUID (GLYCOL)	5 / 6	ENGINE	E-0200 EJW INLET	C01	STD / STD	103	-29/121	1.5875	NA	NA	4	SA-106-B	SA-105	N/A	NO
12518-116-1	6"-G-EJW-1-C01	NORMAL FLUID (GLYCOL)	5 / 6	E-0200 EJW OUTLET	ENGINE	C01	STD / STD	103	-29/121	1.5875	NA	NA	4	SA-106-B	SA-105	N/A	NO
12518-116-2	4"-G-P6202-1-C01	NORMAL FLUID (GLYCOL)	3 / 4	AUX GLYCOL PUMP OUTLET	E-0201 INLET	C01	STD / STD	103	-29/121	1.5875	NA	NA	4	SA-106-B	SA-105	N/A	NO
12518-116-2	4"-G-E0201-1-C01	NORMAL FLUID (GLYCOL)	4 / 6	E-0201 OUTLET	4"-G-E0200-1-C01	C01	STD / STD	103	-29/121	1.5875	NA	NA	4	SA-106-B	SA-105	N/A	NO
12518-111-2	3"-AIR-V0200-3-C31	NORMAL FLUID (AIR)	1.5 / 3	V-0200 OUTLET	6"-AIR-V0200-3-C11	C31	STD / STD	2068	-29/121	1.5875	3102	10%	1, 3	SA-106-B	SA-105	B31.3	NO
12518-111-2	6"-AIR-V0200-3-C11	NORMAL FLUID (AIR)	1.5/2/3/6	3"-AIR-V0200-3-C31	6"-AIR-V0200-3-C01	C11.	STD / STD	1670	-29/121	1.5875	2505	10%	1, 3	SA-106-B	SA-105	B31.3	NO
12518-111-2	6"-AIR-V0200-3-C01	NORMAL FLUID (AIR)	6	6"-AIR-V0200-3-C11	VENT HEADER	C01	STD	103	-29/121	1.5875	NA	NA	4	SA-106-B	SA-105	N/A	NO
12518-116-2	4"-G-E0201-1-C01	NORMAL FLUID (GLYCOL)	3 / 4 / 6	E-0201 OUTLET	E-0200 INLET	C01	STD / STD / STD	103	-29/121	1.5875	NA	NA	4	SA-106-B	SA-105	B31.3	NO
12518-115-1	2"-F-SUPPLY-1-C11	NORMAL FLUID (NATURAL GAS)	1 1/2 / 2	FUEL GAS INLET	V-0201 INLET	C11	XS	1034	-29/121	1.5875	1138	NA	2	SA-106-B	SA-105	B31.3	NO
12518-115-1	2"-F-V0201-1-C11	NORMAL FLUID (NATURAL GAS)	1 1/2 / 2	V-0201 OUTLET	CE-0200 INLET	C11	XS	1034	-29/121	1.5875	1138	NA	2	SA-106-B	SA-105	B31.3	NO
12518-115-1	2"-HG-SUPPLY-1-C11	NORMAL FLUID (NATURAL GAS)	1 1/2 / 2	STARTER GAS INLET	STARTER INLET	C11	XS	1034	-29/121	1.5875	1138	NA	2	SA-106-B	SA-105	B31.3	NO
12518-115-1	1"-IA-SUPPLY-1-C11	INSTRUMENT AIR	1	INSTRUMENT AIR SUPPLY	VARIOUS INSTRUMENTS	C11	XS	1034	-29/121	1.5875	1138	NA	2	SA-106-B	SA-105	B31.3	NO

NOTE 1: TEST MEDIUM TO BE H_2O - MINIMUM DURATION 10 MINUTES
NOTE 2: TEST MEDIUM TO BE AIR
NOTE 3: 10% MPI ON ALL FILLET WELDS INCLUDING PSV GUSSETS
NOTE 4: LEAK TEST

PSV TAG#	LOCATION	MAKE	MODEL #	INLET	OUTLET	SET AT
PSV-0200	V-0200 OIL SEPERATOR	MERCER	91-34H12T82U1	1 1/2" - 300#	2" - 150#	2068 kPag @ 121C

REVISIONS		
NO.	ISSUE	DATE
0	RELEASED FOR REGISTRATION	26-Oct-10

PROFESSIONAL ENGINEER ALBERTA
AFEWORK Y. HATE

DEC 20, 2010

HUSKY OIL OPERATIONS LTD
Site Name:: McMullen TCP
LSD: 03-35-078-25 W4
Caterpillar G3516LE-AFRC
ARIEL RG357M
AIR-X-LIMITED 156EH

ENERFLEX

Project No.	Page No.	By:	Checked:	App'd:		Date:
12518	1 of 1	MR	CK			26-Oct-10

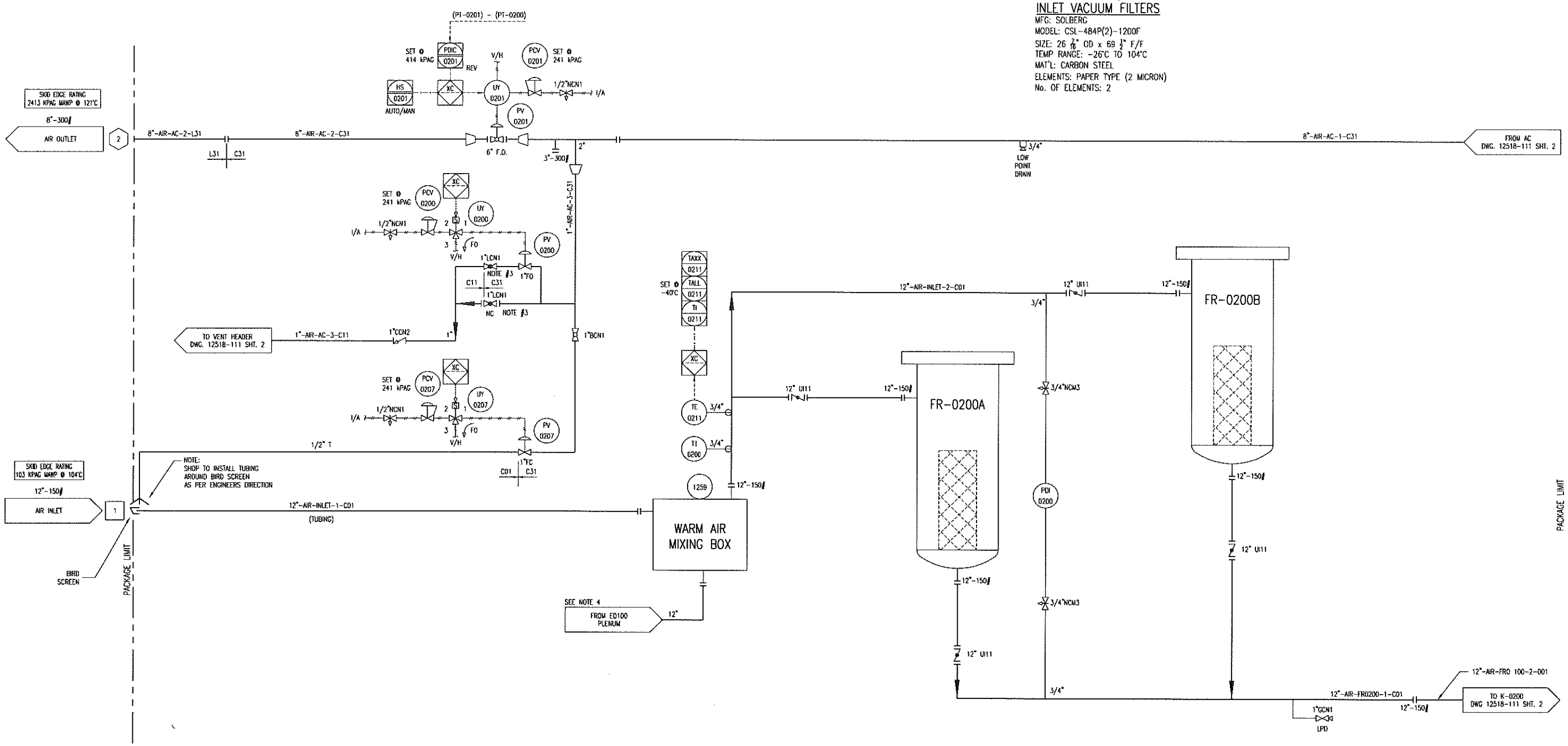

NO SWAK ALLOWED

MTR's REQUIRED ON ALL PRESSURE RETAINING PIPE & FITTINGS

DESTROY PREVIOUS COPIES

REV	DESCRIPTION	DATE	BY	APR
6	FOR REGISTRATION	NOV 23/10	JH	AR
5	TE 0211 ADDED	SEP 10/10	KW	AR
4	GENERAL REVISIONS	AUG 26/10	KW	AR
3	ISSUED FOR CONSTRUCTION TO THE SHOP	07/15/10	KW	AR
2	GENERAL REVISIONS	06/30/10	KW	AR
1	ISSUED FOR FABRICATION	06/25/10	KW	AR
A	ISSUED FOR APPROVAL	06/04/10	KW	AR

DATE 12/09/09	SCALE NTS	
DRAWN BY K. WALTON	CHECKED BY A. ROSSI	APPROVED BY A. ROSSI
CUST PO N/A		
STEP CODE 131 211 212 453		

PERMIT TO PRACTISE APEGGA PERMIT: No. P8651

FOR HUSKY OIL OPERATIONS CATERPILLAR G3516LE-AFRC ARIEL RG357M

ENERFLEX
10121 - BARLOW TRAIL N.E.
CALGARY ALBERTA CANADA

ENG. STAMP
PROFESSIONAL ENGINEER ALBERTA
RELEASED FOR FABRICATION
NAME K. WALTON DATE SEP 10/10
Dec 20, 2010

TITLE P & I DIAGRAM PROCESS GAS

DWG NO 12518-111 | SHT 1 | REV 6

NOTES:
1. SEE DRAWING 099 FOR GENERAL NOTES & PROJECT OVERVIEW.
2. SEE DRAWING 199 FOR P&ID SYMBOL LEGEND.
3. THROTTLE VALVE TO CONTROL BLOWDOWN RATE & AVOID COMPRESSOR OIL LOSS.
4. TAKE WARM AIR FROM BOTTOM OF COOLER PLENUM.

PLOT DATE December 10, 2010 P:\10000 Projects\12518 Husky S1340 G3516LE Ariel RG357M\Drafting\PAID\12518-111-FOR REGISTRATION.dwg

THE INFORMATION CONTAINED HEREIN IS THE CONFIDENTIAL PROPERTY OF TORONOVI ENERGY SYSTEMS AND IS NOT FOR PUBLICATION, AND NO PART THEREOF SHALL BE COPIED OR COMMUNICATED TO A THIRD PARTY WITHOUT AUTHORIZATION FROM TORONOVI ENERGY SYSTEMS.

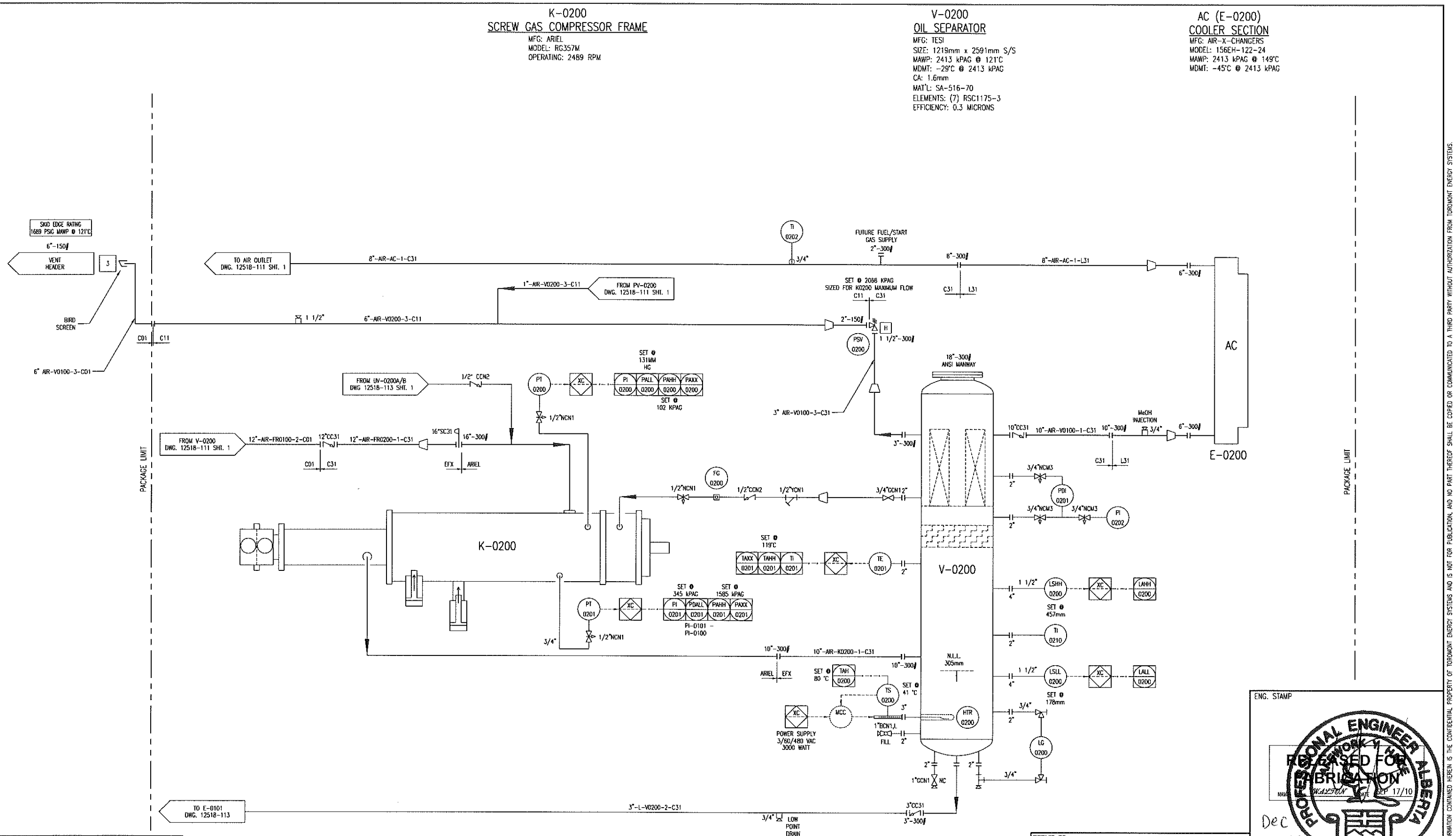

MTR's REQUIRED ON ALL PRESSURE RETAINING PIPE & FITTINGS

DESTROY PREVIOUS COPIES

NO SWAK ALLOWED

REV	DESCRIPTION	DATE	BY	APR
6	FOR REGISTRATION	NOV 23/10	JH	AR
5	TAG REMOVED	SEP 17/10	KW	AR
4	AIR COOLER REVISED	07/21/10	KW	AR
3	ISSUED FOR CONSTRUCTION TO THE SHOP	07/15/10	KW	AR
2	GENERAL REVISIONS	06/30/10	KW	AR
1	ISSUED FOR FABRICATION	06/25/10	KW	AR
A	ISSUED FOR APPROVAL	06/04/10	KW	AR

DATE 12/09/09 | SCALE NTS
DRAWN BY K. WALTON | CHECKED BY A. BOLLS | APPROVED BY A. BOLLS
CUST PO N/A
STEP CODE 131 213 214 453

PERMIT TO PRACTISE APEGGA PERMIT: No. P8651

FOR HUSKY OIL OPERATIONS
CATERPILLAR G3516LE-AFRC
ARIEL RG357M

ENERFLEX
10121 - BARLOW TRAIL N.E.
CALGARY ALBERTA CANADA

TITLE P & I DIAGRAM PROCESS GAS

DWG NO 12518-111 | SHT 2 | REV 6

ENG. STAMP
PROFESSIONAL ENGINEER ALBERTA
RELEASED FOR FABRICATION
DATE SEP 17/10
Dec 20/2010

THE INFORMATION CONTAINED HEREIN IS THE CONFIDENTIAL PROPERTY OF TORQMONT ENERGY SYSTEMS AND IS NOT FOR PUBLICATION, AND NO PART THEREOF SHALL BE COPIED OR COMMUNICATED TO A THIRD PARTY WITHOUT AUTHORIZATION FROM TORQMONT ENERGY SYSTEMS.

PLOT DATE December 10, 2010 P:\10000 Projects\12518 Husky S1340 C3516LE Ariel RG357M\Drafting\Pid01\12518-111-FOR REGISTRATION.dwg

P-0200 COMPRESSOR LUBE OIL PUMP	FR-0200B COMPRESSOR BEARING OIL FILTER	FR-0200A COMPRESSOR ROTOR OIL FILTER	FR-0200C COMPRESSOR PRELUBE OIL FILTER	P-0201 COMPRESSOR OIL COOLER PUMP	E-0201 COMPRESSOR OIL COOLER
MFG: ARIEL (INTEGRAL) MODEL: P755x3.00 FLOW RATE: 88.4 GPM	MFG: ARIEL PARTICLE RATING: 6 MICRON	MFG: ARIEL PARTICLE RATING: 16 MICRON	MFG: PARKER PARTICLE RATING: 5-7 MICRON	MFG: TUTHILL MODEL: 4105V-L-7 MAWP: 1724 KPAG FLOW: 18 LPM DRIVER: AIR MOTOR	MFG: GEA MODEL: FPA10X20-360M CHANNELS: 90 MAWP - OIL SIDE: 2413 kPAG @ 177°C MAWP - GLYCOL SIDE: 2413 kPAG @ 177°C

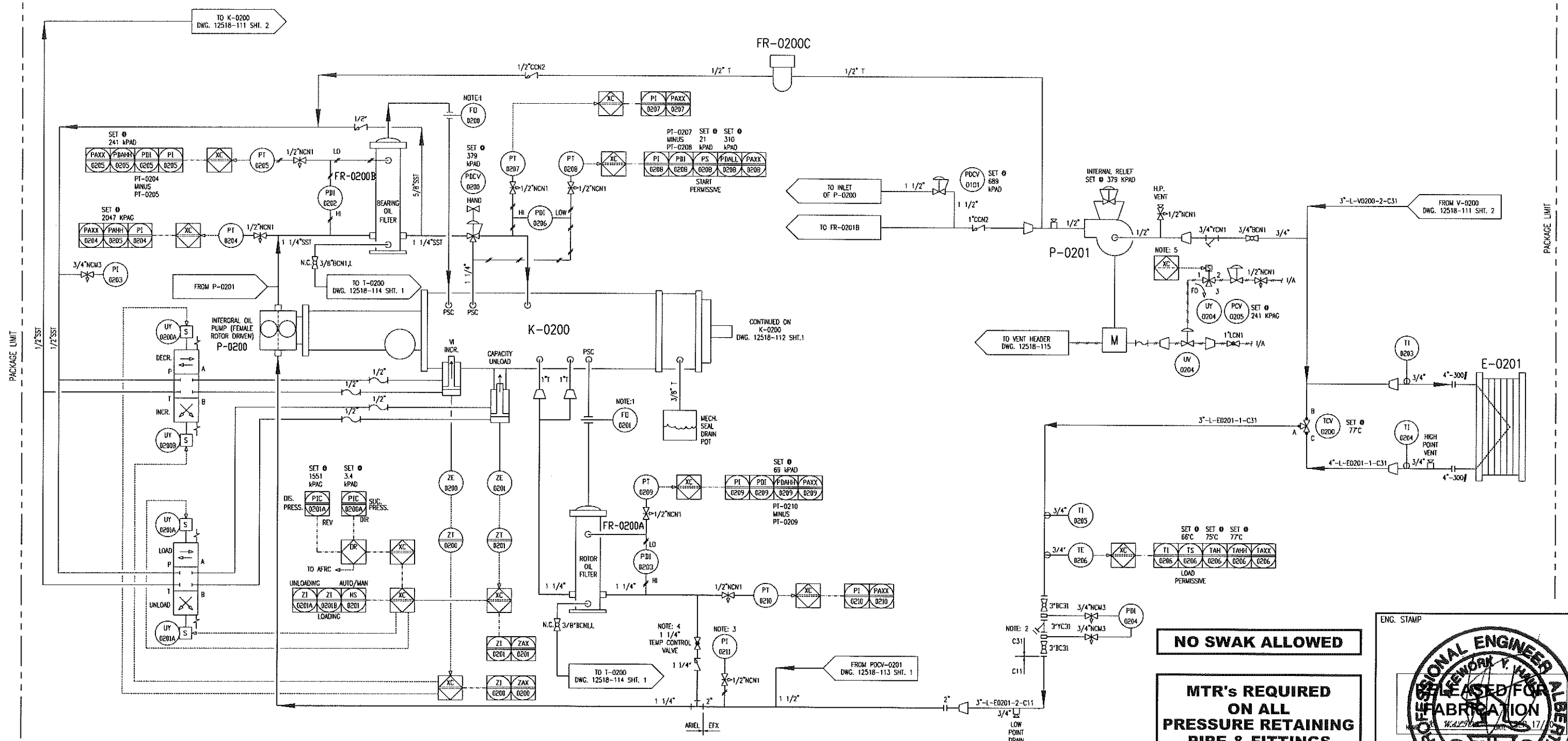

NOTES:
1. ORIFICE SUPPLIED WITH COMPRESSOR.
2. 40 MESH MINIMUM.
3. MOUNT PI-0111 REMOTELY.
4. VALVE IS NORMALLY OPEN; THROTTLE TO ADJUST ROTOR OIL TEMP
5. PRE-LUBE ONLY REQUIRED ON FIRST START ATTEMPT

DESTROY PREVIOUS COPIES

REV	DESCRIPTION	DATE	BY	APR
8	VALVE ADDED	SEP 17/10	KW	AR
7	PSV-0101 CHANGED TO PDCV-0101	SEP 13/10	KW	AR
6	PUMP VENT DESCRIPTIONS REVISED	SEP 10/10	KW	AR
5	PUMP VENT DESCRIPTIONS REVISED	SEP 02/10	KW	AR
4	GENERAL REVISIONS	AUG 26/10	KW	AR
3	ISSUED FOR CONSTRUCTION TO THE SHOP	07/15/10	KW	AR
2	GENERAL REVISIONS	06/30/10	KW	AR
1	ISSUED FOR FABRICATION	06/25/10	KW	AR
A	ISSUED FOR APPROVAL	06/04/10	KW	AR

NO SWAK ALLOWED

MTR's REQUIRED ON ALL PRESSURE RETAINING PIPE & FITTINGS

ENG. STAMP: PROFESSIONAL ENGINEER ALBERTA — RELEASED FOR FABRICATION — Dec 29 2010

PERMIT TO PRACTISE: APEGGA PERMIT: No. P8651

DATE 12/09/09	SCALE NTS		
DRAWN BY X. WALTON	CHECKED BY A. ROSSS	APPROVED BY A. ROSSS	
CUST PO N/A			
STEP CODE 113 550			

FOR: HUSKY OIL OPERATIONS CATERPILLAR G3516LE-AFRC ARIEL RG357M

ENERFLEX
10121 - BARLOW TRAIL N.E.
CALGARY ALBERTA CANADA

TITLE: P & I DIAGRAM COMPRESSOR LUBE OIL / UTILITIES

DWG NO 12518-113 | SHT 1 | REV 8

PLOT DATE November 23, 2010 P:\10000 Projects\12518 Husky 51340 G3516LE Ariel RG357M\Drafting\P&ID\12518-111-FOR REGISTRATION.dwg

THE INFORMATION CONTAINED HEREIN IS THE CONFIDENTIAL PROPERTY OF TORQUMONT ENERGY SYSTEMS AND IS NOT FOR PUBLICATION, AND NO PART THEREOF SHALL BE COPIED OR COMMUNICATED TO A THIRD PARTY WITHOUT AUTHORIZATION FROM TORQUMONT ENERGY SYSTEMS.

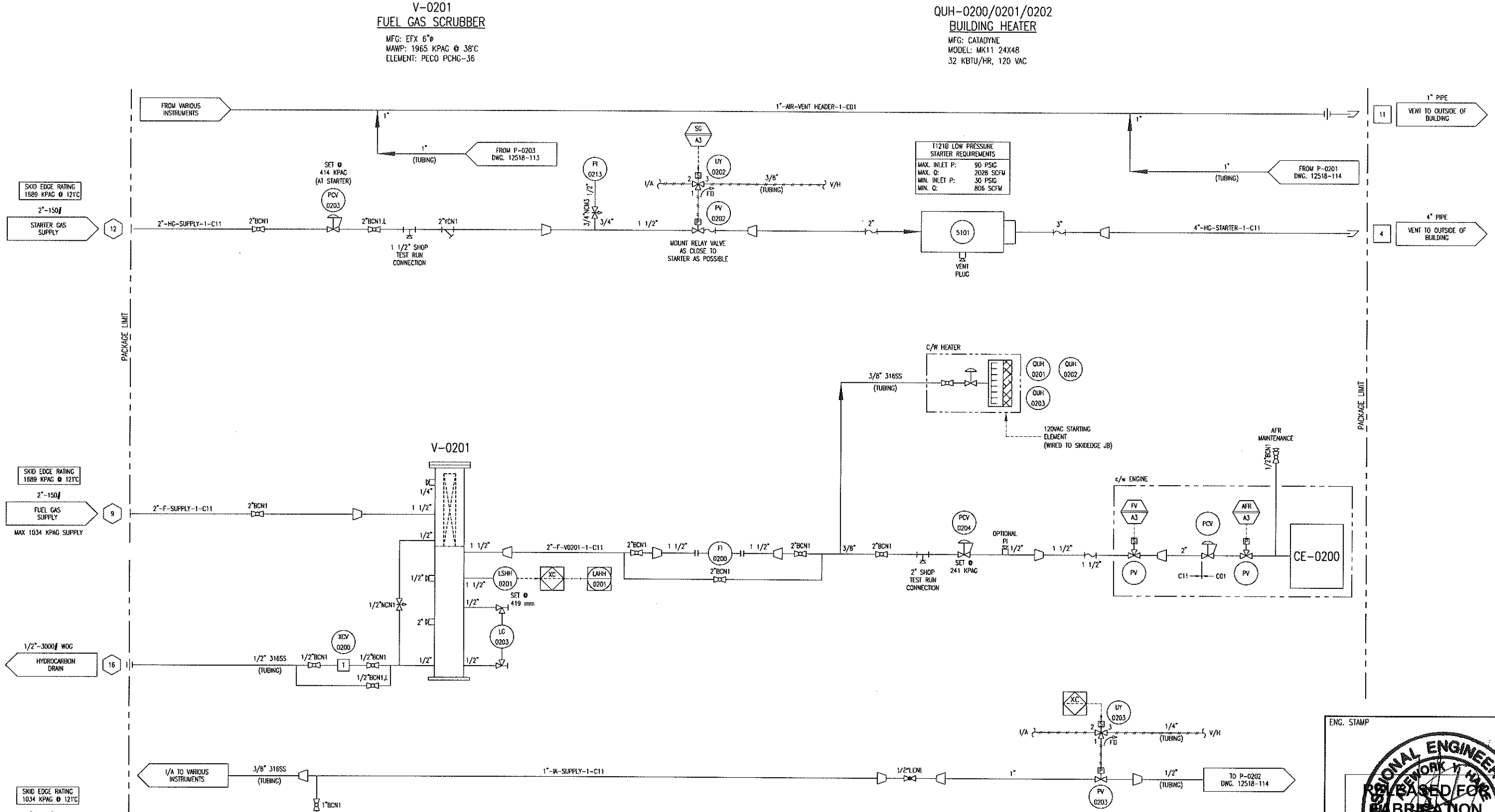

NO SWAK ALLOWED

MTR's REQUIRED ON ALL PRESSURE RETAINING PIPE & FITTINGS

DESTROY PREVIOUS COPIES

REV	DESCRIPTION	DATE	BY	APR
7	FOR REGISTRATION	NOV 23/10	JH	AR
6	HYDROCARBON DRAIN ADDED	SEP 17/10	KW	AR
5	SG A3 ADDED / V-0101 CONNECTIONS REVED	SEP 10/10	KW	AR
4	PUMP VENT DESCRIPTIONS REVISED/TAG REVISED	SEP 02/10	KW	AR
3	ISSUED FOR CONSTRUCTION TO THE SHOP	07/15/10	KW	AR
2	GENERAL REVISIONS	06/30/10	KW	AR
–	–	–	–	–
A	ISSUED FOR APPROVAL	06/04/10	KW	AR

DATE 12/09/09 | SCALE NTS
DRAWN BY X. WALTON | CHECKED BY A. ROSSI | APPROVED BY A. ROSSI
CUST PO N/A
STEP CODE 112 240 244 510

PERMIT TO PRACTISE APEGGA PERMIT: No. P8651

FOR HUSKY OIL OPERATIONS
CATERPILLAR G3516LE-AFRC
ARIEL RG357M

ENERFLEX
10121 - BARLOW TRAIL N.E.
CALGARY ALBERTA CANADA

TITLE P & I DIAGRAM
START / FUEL SUPPLY

DWG NO 12518-115 | SHT 1 | REV 7

ENG. STAMP
PROFESSIONAL ENGINEER ALBERTA
RELEASED FOR FABRICATION
WALTON SEP 17/10
Doc 29/2010

THE INFORMATION CONTAINED HEREIN IS THE CONFIDENTIAL PROPERTY OF TORQMONT ENERGY SYSTEMS AND IS NOT FOR PUBLICATION, AND NO PART THEREOF SHALL BE COPIED OR COMMUNICATED TO A THIRD PARTY WITHOUT AUTHORIZATION FROM TORQMONT ENERGY SYSTEMS.

PLOT DATE November 23, 2010 P:\10000 Projects\12518 Husky 51340 G3516LE Ariel RG357M\Drafting\PAID\12518-111-FOR REGISTRATION.dwg

T-0203
WASTE GLYCOL TANK
MFG: EFX
CAPACITY: 1281L
SIZE: 24" X 8" X 480", 3/8" THK.
MAT'L: G40.21350W

ECE-0200
GLYCOL HEATER
MFG: KIM HOT START
MODEL: CLER31804
POWER: 480V/3Ph/60Hz
FLOW RATE: 40 GPM

P-0204
GLYCOL TRANSFER PUMP
MFG: YAMADA
MODEL: NDP-25BAN
INLET GAS PRESSURE: 138-689 KPAG
FLOW: 100 LPM @ 276 KPGA

T-0204
GLYCOL (EJW) SURGE TANK
MFG: EFX
CAPACITY: 103L
SIZE: 12" X 12" X 48", 1/4" THK
MAT'L: G40.21350W

EJW (E-0200)
ENGINE JACKET WATER COOLER SECTION
MAWP: 97 KPAG @ 149°C
MDMT: -29°C @ 97 KPAG

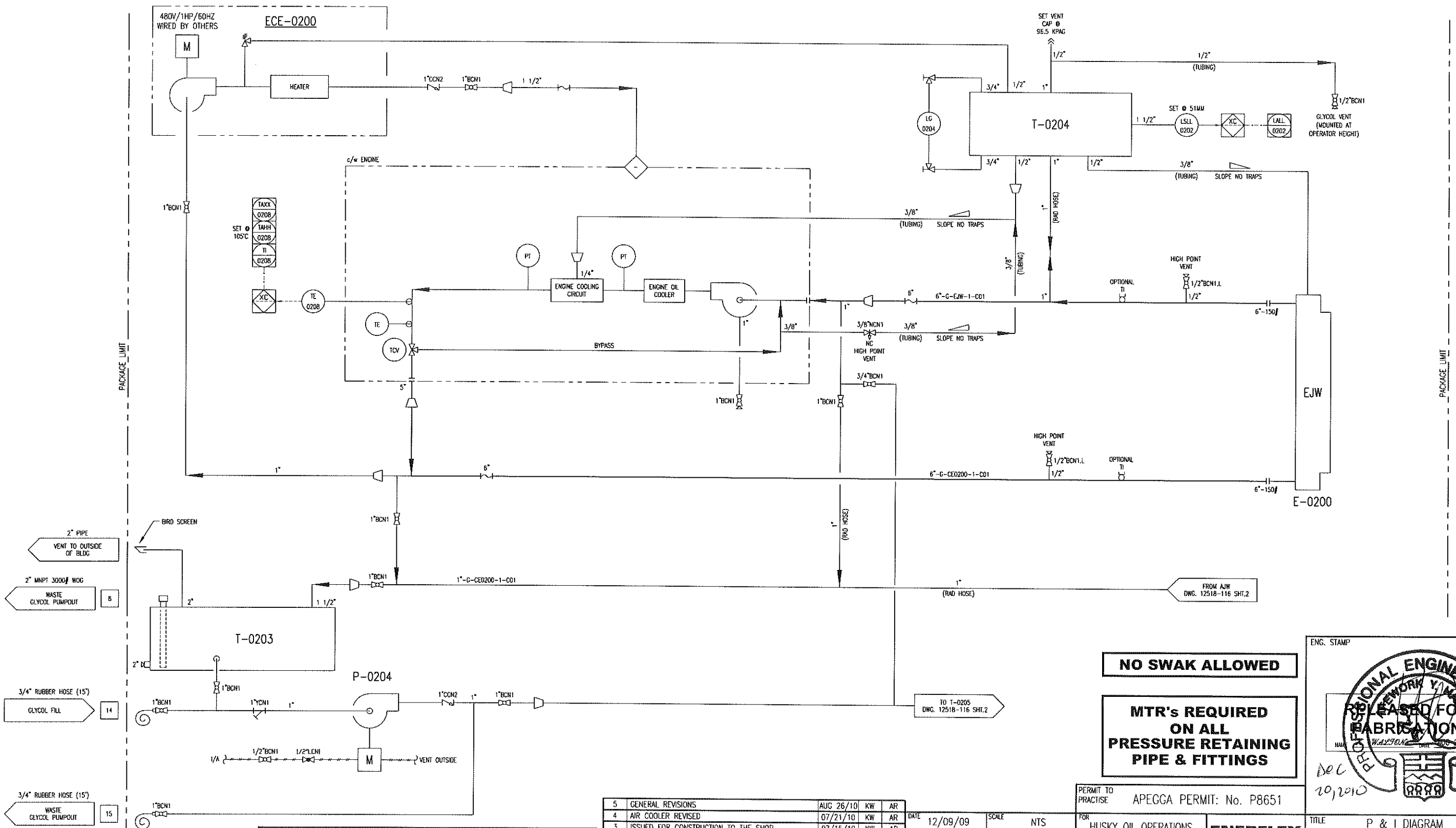

NO SWAK ALLOWED

MTR's REQUIRED ON ALL PRESSURE RETAINING PIPE & FITTINGS

DESTROY PREVIOUS COPIES

REV	DESCRIPTION	DATE	BY	APR
5	GENERAL REVISIONS	AUG 26/10	KW	AR
4	AIR COOLER REVISED	07/21/10	KW	AR
3	ISSUED FOR CONSTRUCTION TO THE SHOP	07/15/10	KW	AR
2	GENERAL REVISIONS	06/30/10	KW	AR
1	ISSUED FOR FABRICATION	06/25/10	KW	AR
A	ISSUED FOR APPROVAL	06/04/10	KW	AR

DATE 12/09/09 | SCALE NTS
DRAWN BY X. WALLIGIT | CHECKED BY A. ROSSI | APPROVED BY A. ROSSI
CUST PO N/A
STEP CODE 112 412 521

PERMIT TO PRACTISE APEGGA PERMIT: No. P8651

FOR HUSKY OIL OPERATIONS CATERPILLAR G3516LE-AFRC ARIEL RG357M

ENERFLEX
10121 - BARLOW TRAIL N.E.
CALGARY ALBERTA CANADA

TITLE P & I DIAGRAM COOLING SYSTEM ENGINE JACKET WATER

DWG NO 12518-116 | SHT 1 | REV 5

ENG. STAMP
PROFESSIONAL ENGINEER ALBERTA
RELEASED FOR FABRICATION
Dec 20, 2010

THE INFORMATION CONTAINED HEREIN IS THE CONFIDENTIAL PROPERTY OF TORQUMONT ENERGY SYSTEMS AND IS NOT FOR PUBLICATION, AND NO PART THEREOF SHALL BE COPIED OR COMMUNICATED TO A THIRD PARTY WITHOUT AUTHORIZATION FROM TORQUMONT ENERGY SYSTEMS.

PLOT DATE December 10, 2010 P:\10000 Projects\12518 Husky S1340 C3516LE And RG357M\Drafting\Dwg\12518-111-FOR REGISTRATION.dwg

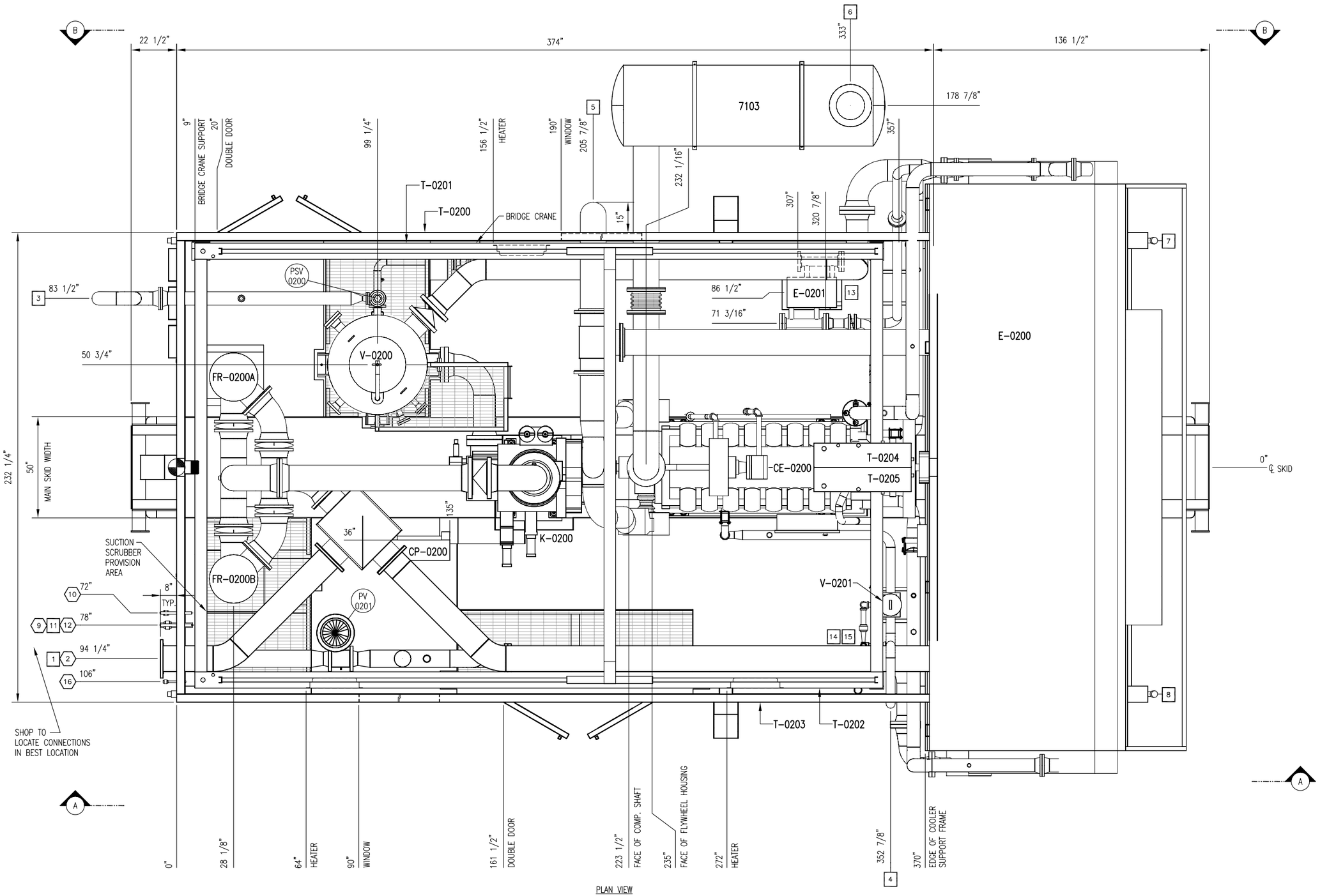

PLAN VIEW

NOZZLE SCHEDULE

MARK	SERVICE	SIZE	RATING	TYPE
1	AIR INLET	12"	150#	RF
2	AIR OUTLET	8"	300#	RF
3	HIGH PRESSURE VENT	6"	150#	RF
4	STARTER VENT	4"	–	PIPE
5	ENGINE INTAKE	12"	–	PIPE
6	EXHAUST	14"	–	PIPE
7	WASTE OIL PUMPOUT	2"	3000#	MNPT
8	WASTE GLYCOL PUMPOUT	2"	3000#	MNPT
9	FUEL GAS SUPPLY	2"	150#	RF
10	INSTRUMENT AIR SUPPLY	1"	3000#	FNPT
11	INSTRUMENT AIR VENT	1"	–	PIPE
12	START GAS SUPPLY	2"	150#	RF
13	ENGINE LUBE OIL FILL	3/4"	–	HOSE
14	GLYCOL FILL	3/4"	–	HOSE
15	WASTE GLYCOL PUMPOUT	3/4"	–	HOSE
16	HYDROCARBON DRAIN	1/2"	3000#	FNPT

GENERAL SPECIFICATIONS

OVERALL PACKAGE LENGTH				533"
OVERALL PACKAGE WIDTH				232 1/4"
OVERALL PACKAGE HEIGHT (w/STACK)				317 1/2"
OVERALL OPERATING PACKAGE WEIGHT (LBS)				TBD
MAIN SKID SHIPPING WEIGHT (LBS)				109,635
BRIDGE CRANE RATING				5 TON
SEAL PAN	■ FLAT	☐ NONE	☐ SLOPED	
LOADING METHOD	■ LIVE ROLL	☐ CRANE	■ JACK & ROLL	

NOTES:

1. ALL (Z) DIMENSIONS TAKEN FROM TOP OF SKID.
2. ALL OTHER NOTES FOUND ON DWG. #LEGEND.
3. ALL SKID EDGE CONNECTIONS ±1/4" TOLERANCE.
4. ALL TAIL DIMENSIONS FROM REFERENCE POINT.
6. SKID DEPTH: 24"
5. CENTER OF GRAVITY:
   'X' FROM REF. POINT: 196.1"
   'Y' FROM REF. POINT: –0.6"
   'Z' FROM REF. POINT: 62.5"

'Z' DIMENSION FROM TOP OF SKID

FINAL AS BUILT

NAME K. WATSON DATE DEC 21, 2010

REV	DESCRIPTION	DATE	BY	APR
5	AS BUILT	DEC 21/10	KW	KG
4	NOZZLE 16 ADDED	SEP 17/10	KW	AR
3	NOZZLE CHART REVISED/MOVE CONN. AS PER NOTE	SEP 02/10	KW	AR
2	MUFFLER MOVED/PLATFORM AND DIMS ADDED	AUG 26/10	KW	AR
1	ISSUED FOR CONSTRUCTION	15/06/10	KW	AR
A	ISSUED FOR APPROVAL	15/06/10	KW	AR

DATE 07/06/10 SCALE 1/2" = 1'–0"
DRAWN BY K. WATSON CHECKED BY A. ROSSI APPROVED BY A. ROSSI
CUST PO N/A
STEP CODE N/A

FOR HUSKY OIL OPERATIONS CATERPILLAR G3516LE–AFRC ARIEL RG357M

ENERFLEX
10121 – BARLOW TRAIL N.E.
CALGARY ALBERTA CANADA

PERMIT TO PRACTISE APEGGA PERMIT: No. P8651

TITLE PLAN VIEW

DWG NO 12518–201 SHT 1 REV 5

THE INFORMATION CONTAINED HEREIN IS THE CONFIDENTIAL PROPERTY OF TOROMONT ENERGY SYSTEMS AND IS NOT FOR PUBLICATION, AND NO PART THEREOF SHALL BE COPIED OR COMMUNICATED TO A THIRD PARTY WITHOUT AUTHORIZATION FROM TOROMONT ENERGY SYSTEMS.

P:\10000 Projects\12518 Husky S1340 G3516LE Ariel RG357M\Drafting\12518-201-301 AS BUILT.dwg
PLOT DATE December 23, 2010

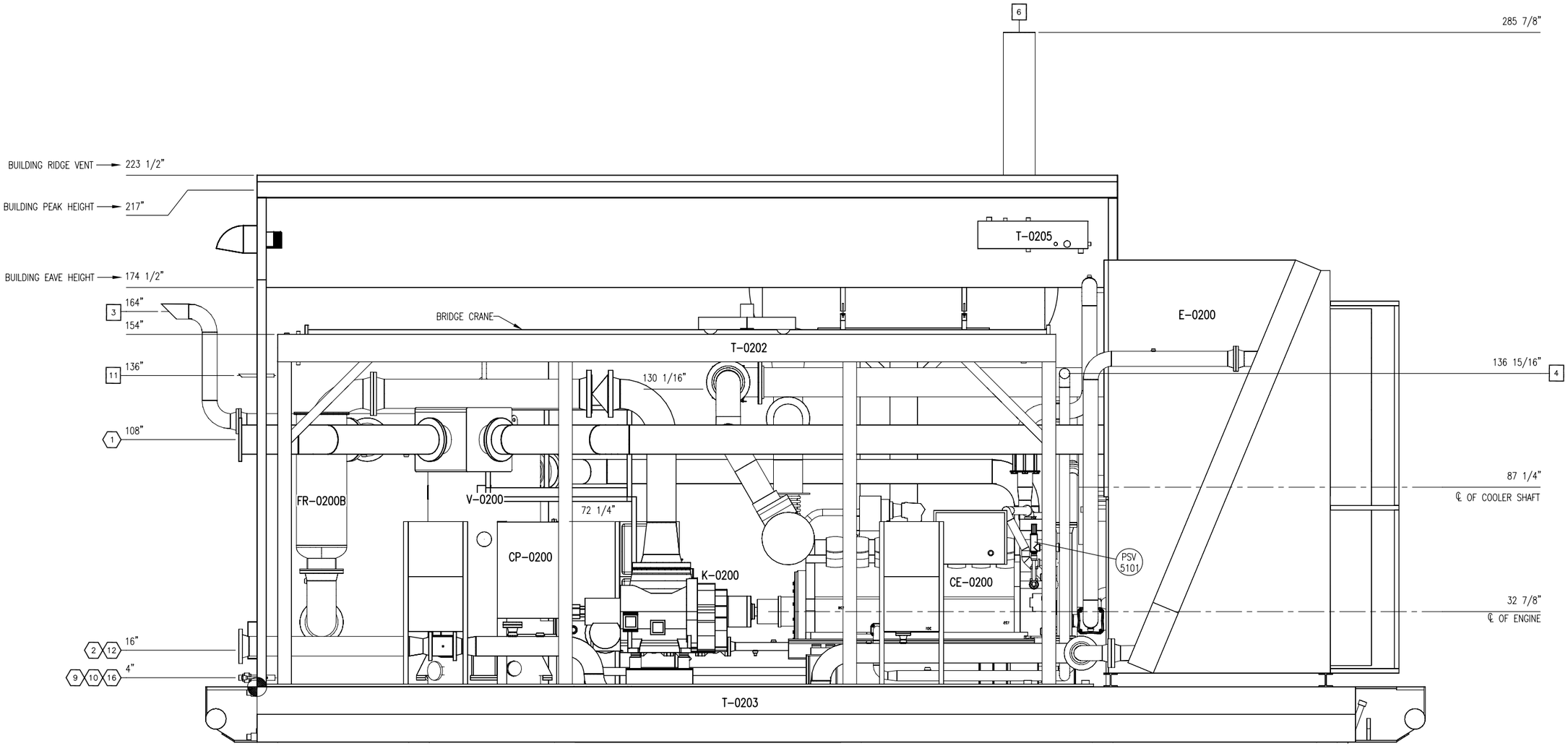

ELEVATION 'A-A'

FINAL AS BUILT

NAME X. WALTON DATE DEC 21, 2010

REV	DESCRIPTION	DATE	BY	APR
4	AS BUILT	DEC 21/10	KW	KG
3	NOZZLE 16 ADDED	SEP 17/10	KW	AR
2	MUFFLER MOVED/PLATFORM ADDED	AUG 26/10	KW	AR
1	ISSUED FOR CONSTRUCTION	15/06/10	KW	AR
A	ISSUED FOR APPROVAL	11/06/10	KW	AR

DATE 07/06/10 | SCALE 1/2" = 1'-0"

DRAWN BY X. WALTON | CHECKED BY A. ROSSI | APPROVED BY A. ROSSI

CUST PO N/A

STEP CODE N/A

FOR HUSKY OIL OPERATIONS CATERPILLAR G3516LE-AFRC ARIEL RG357M

ENERFLEX
10121 – BARLOW TRAIL N.E.
CALGARY ALBERTA CANADA

PERMIT TO PRACTISE APEGGA PERMIT: No. P8651

TITLE GENERAL ARRANGEMENT ELEVATION A-A

DWG NO 12518-201 | SHT 2 | REV 4

THE INFORMATION CONTAINED HEREIN IS THE CONFIDENTIAL PROPERTY OF TOROMONT ENERGY SYSTEMS AND IS NOT FOR PUBLICATION, AND NO PART THEREOF SHALL BE COPIED OR COMMUNICATED TO A THIRD PARTY WITHOUT AUTHORIZATION FROM TOROMONT ENERGY SYSTEMS.

P:\10000 Projects\12518 Husky S1340 G3516LE Ariel RG357M\Drafting\12518-201-301 AS BUILT.dwg
PLOT DATE December 23, 2010

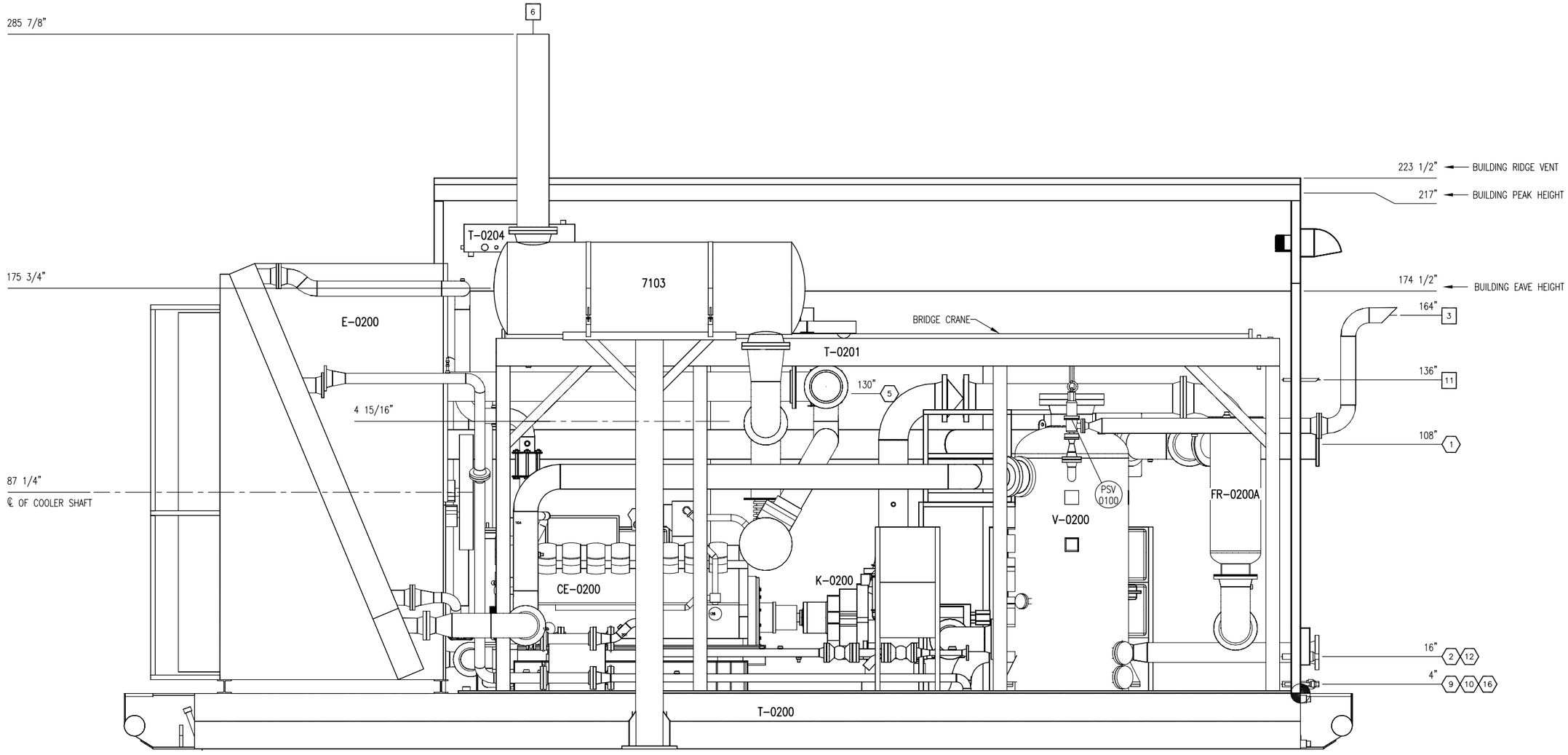

ELEVATION 'B-B'

FINAL AS BUILT

NAME K. WATSON DATE DEC 21, 2010

REV	DESCRIPTION	DATE	BY	APR
3	AS BUILT	DEC 21/10	KW	KG
2	MUFFLER MOVED/PLATFORM ADDED	AUG 26/10	KW	AR
1	ISSUED FOR CONSTRUCTION	15/06/10	KW	AR
A	ISSUED FOR APPROVAL	11/06/10	KW	AR

DATE 07/06/10 | SCALE 1/2" = 1'-0"

DRAWN BY K. WATSON | CHECKED BY A. ROSSI | APPROVED BY A. ROSSI

CUST PO N/A

STEP CODE N/A

FOR HUSKY OIL OPERATIONS CATERPILLAR G3516LE-AFRC ARIEL RG357M

ENERFLEX
10121 - BARLOW TRAIL N.E.
CALGARY ALBERTA CANADA

PERMIT TO PRACTISE APEGGA PERMIT: No. P8651

TITLE GENERAL ARRANGEMENT ELEVATION B-B

DWG NO 12518-201 | SHT 3 | REV 3

THE INFORMATION CONTAINED HEREIN IS THE CONFIDENTIAL PROPERTY OF TOROMONT ENERGY SYSTEMS AND IS NOT FOR PUBLICATION, AND NO PART THEREOF SHALL BE COPIED OR COMMUNICATED TO A THIRD PARTY WITHOUT AUTHORIZATION FROM TOROMONT ENERGY SYSTEMS.

PLOT DATE December 23, 2010 P:\10000 Projects\12518 Husky S1340 G3516LE Ariel RG357M\Drafting\12518-201-301 AS BUILT.dwg

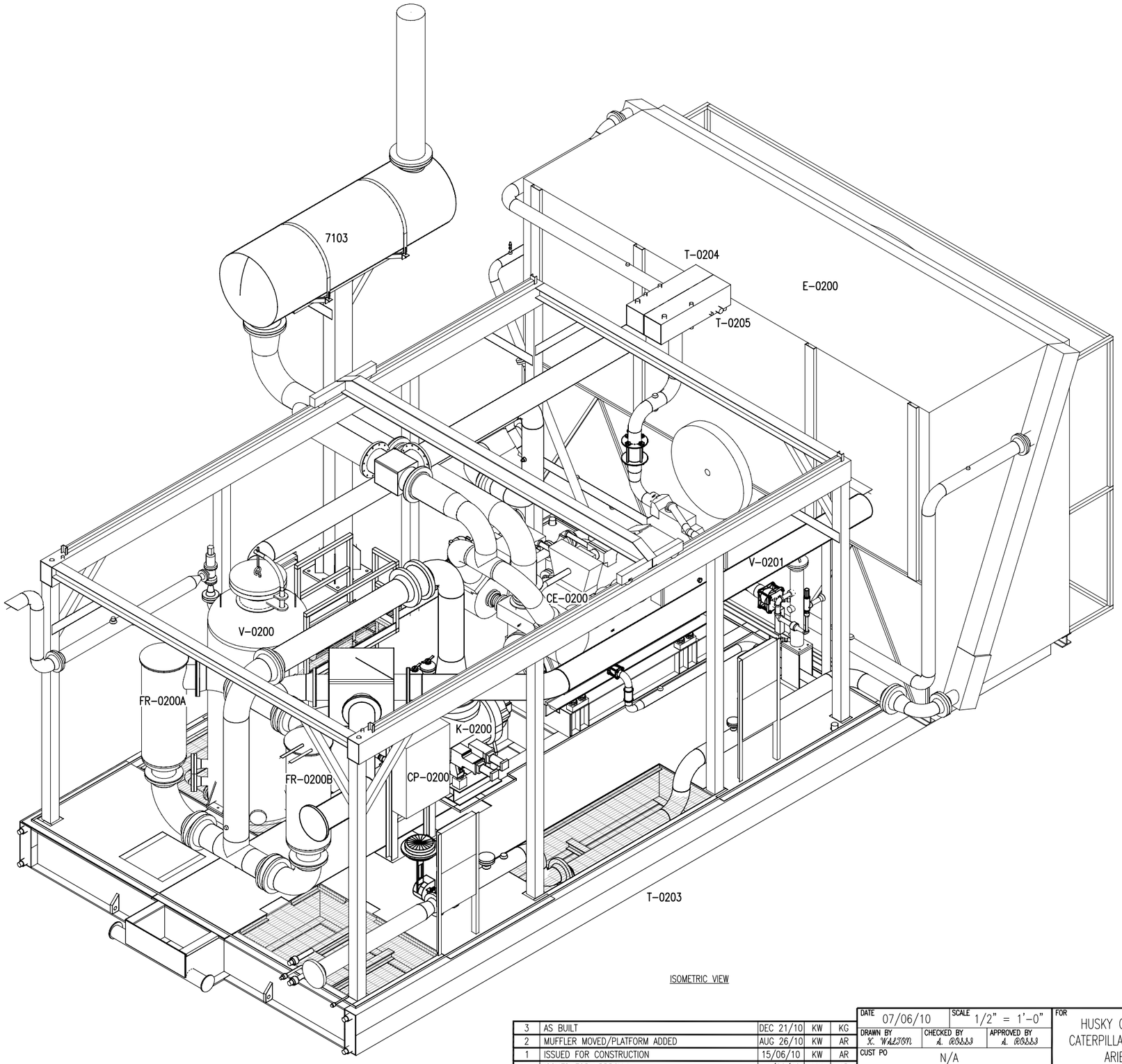

ISOMETRIC VIEW

FINAL AS BUILT
NAME K. WALTON DATE DEC 21, 2010

REV	DESCRIPTION	DATE	BY	APR
3	AS BUILT	DEC 21/10	KW	KG
2	MUFFLER MOVED/PLATFORM ADDED	AUG 26/10	KW	AR
1	ISSUED FOR CONSTRUCTION	15/06/10	KW	AR
A	ISSUED FOR APPROVAL	11/06/10	KW	AR

DATE 07/06/10 | SCALE 1/2" = 1'-0"
DRAWN BY K. WALTON | CHECKED BY A. ROSSI | APPROVED BY A. ROSSI
CUST PO N/A
STEP CODE N/A

FOR HUSKY OIL OPERATIONS
CATERPILLAR G3516LE-AFRC
ARIEL RG357M

ENERFLEX
10121 – BARLOW TRAIL N.E.
CALGARY ALBERTA CANADA

PERMIT TO PRACTISE APEGGA PERMIT: No. P8651

TITLE GENERAL ARRANGEMENT ISOMETRIC VIEW

DWG NO 12518-201 | SHT 4 | REV 3

THE INFORMATION CONTAINED HEREIN IS THE CONFIDENTIAL PROPERTY OF TOROMONT ENERGY SYSTEMS AND IS NOT FOR PUBLICATION, AND NO PART THEREOF SHALL BE COPIED OR COMMUNICATED TO A THIRD PARTY WITHOUT AUTHORIZATION FROM TOROMONT ENERGY SYSTEMS.

P:\10000 Projects\12518 Husky S1340 G3516LE Ariel RG357M\Drafting\12518-201-301 AS BUILT.dwg
PLOT DATE December 23, 2010

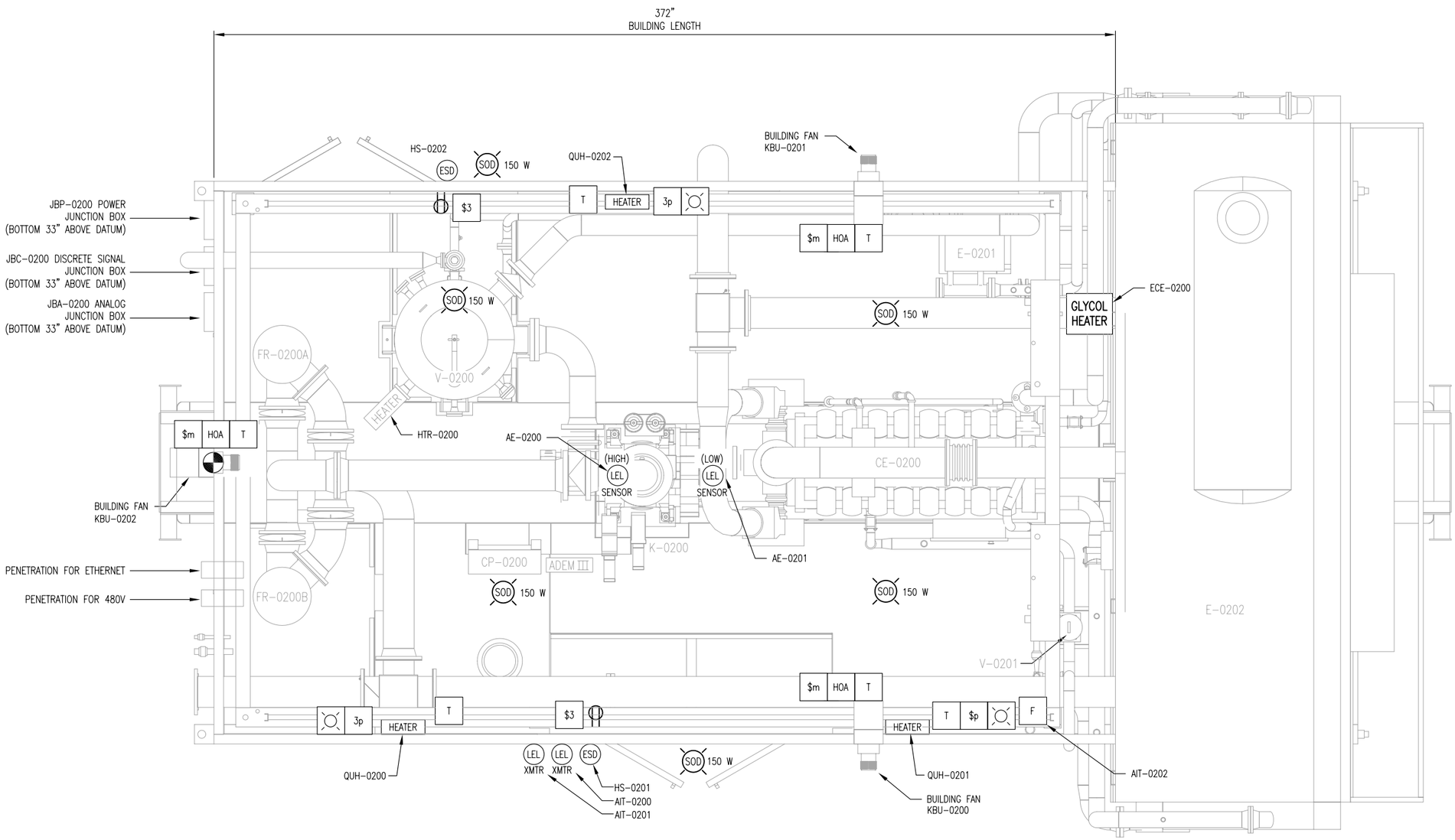

PLAN VIEW

NOTES:
1. DATUM IS FROM TOP OF SKID

ELECTRICAL LEGEND

SYMBOL	DESCRIPTION
	LIGHT
INC	INCANDESCENT LIGHT
SOD	H.P. SODIUM LIGHT
E	BATTERY POWERED EMERGENCY LIGHT
	RECEPTACLE
T	THERMOSTAT
F	FIRE EYE
H F	FIRE PULL STATION
R	COMBUSTIBLE LEL GAS ALARM BEACON
B	TOXIC GAS H2S ALARM BEACON
C F	FIRE ALARM STROBE
F	ALARM HORN
CO	CO SENSOR
LEL	COMBUSTIBLE DETECTION
H2S	H2S SENSOR
HEATER	HEATER
TIME	TIMER SWITCH
ESD	EMERGENCY SHUT DOWN BUTTON
	–

FINAL AS BUILT
NAME K. WALTON DATE 12/21/10

REV	DESCRIPTION	DATE	BY	APR
2	AS BUILT	12/21/10	KW	KG
1	ISSUED FOR CONSTRUCTION	OCT 29/10	KW	AR
A	ISSUED FOR APPROVAL	11/06/10	KW	AR

DATE 07/06/10 | SCALE 1/2" = 1'-0"
DRAWN BY K. WALTON | CHECKED BY A. ROSSI | APPROVED BY A. ROSSI
CUST PO N/A
STEP CODE N/A

FOR HUSKY OIL OPERATIONS
CATERPILLAR G3516LE-AFRC
ARIEL RG357M

ENERFLEX
10121 – BARLOW TRAIL N.E.
CALGARY ALBERTA CANADA

PERMIT TO PRACTISE APEGGA PERMIT: No. P8651

TITLE ELECTRICAL LAYOUT

DWG NO 12518-201 | SHT 5 | REV 2

THE INFORMATION CONTAINED HEREIN IS THE CONFIDENTIAL PROPERTY OF TOROMONT ENERGY SYSTEMS AND IS NOT FOR PUBLICATION, AND NO PART THEREOF SHALL BE COPIED OR COMMUNICATED TO A THIRD PARTY WITHOUT AUTHORIZATION FROM TOROMONT ENERGY SYSTEMS.

P:\10000 Projects\12518 Husky S1340 G3516LE Ariel RG357M\Drafting\12518-201-301 AS BUILT.dwg
PLOT DATE December 23, 2010

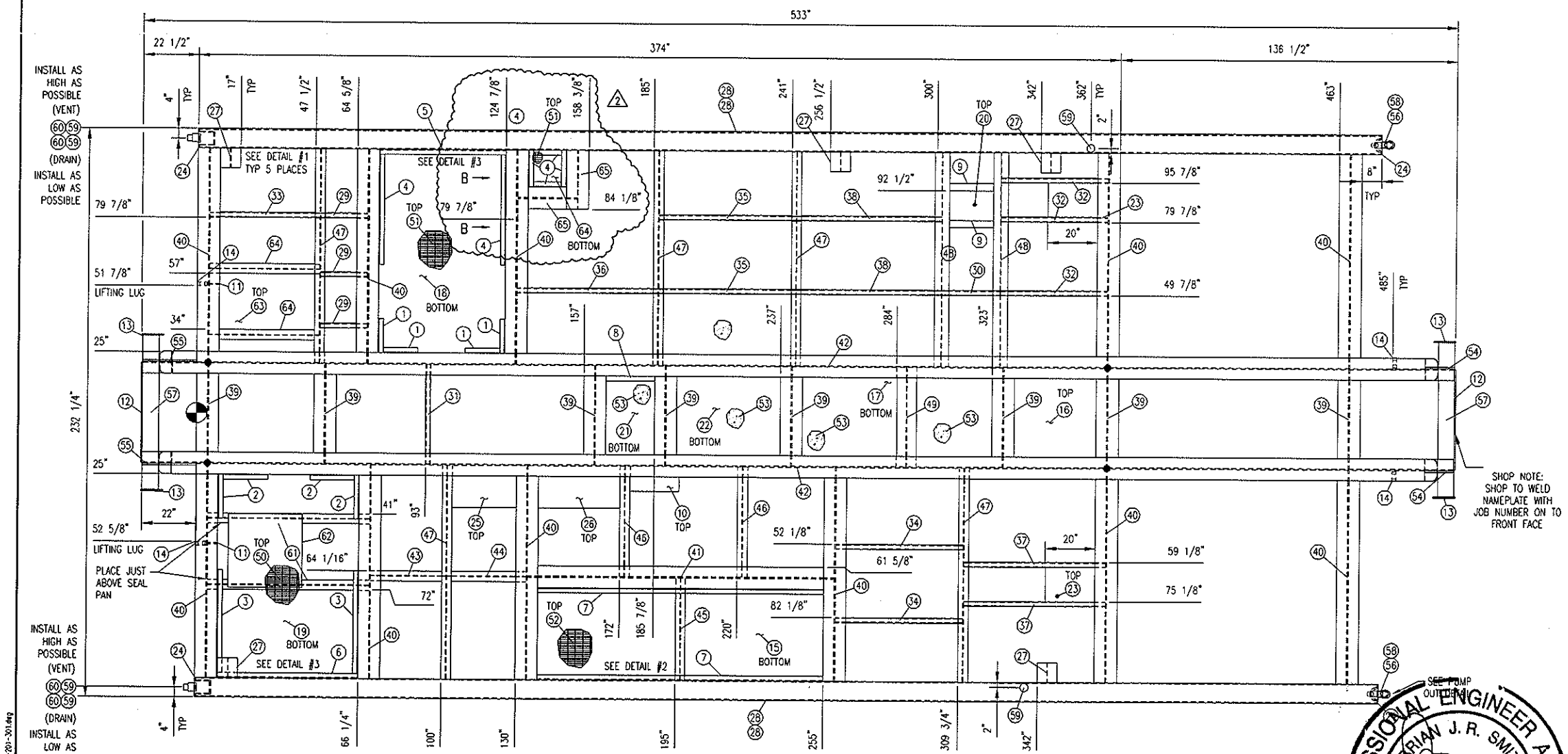

PLAN VIEW

ALL SECONDARY BEAMS SHOULD BE COPED AND FLUSH WITH THE TOP OF STEEL U.N.O.

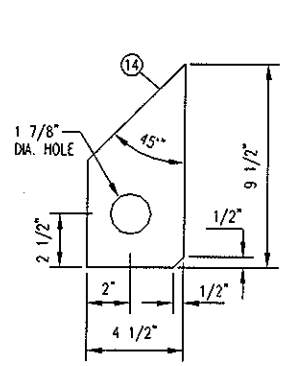

LIFTING LUG
TYPICAL 4 PLACES
SCALE: 3" = 1'-0"

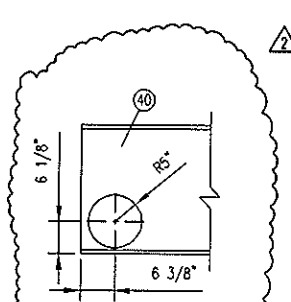

VIEW 'B-B'
SCALE: 3/4" = 1'-0"

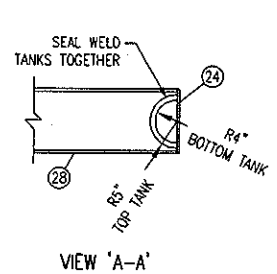

VIEW 'A-A'
TYPICAL 2 PLACES
SCALE: 3/4" = 1'-0"

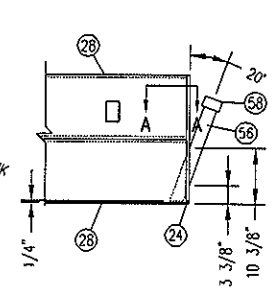

PUMPOUT DETAIL
SCALE: 3/4" = 1'-0"
TYPICAL 2 PLACES

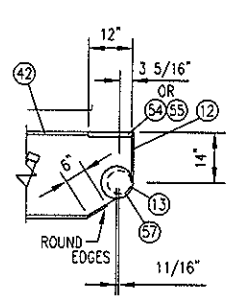

LIFTING BAR
SCALE: 1/2" = 1'-0"
TYPICAL 2 PLACES

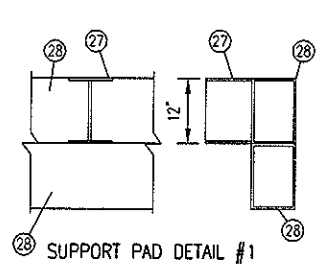

SUPPORT PAD DETAIL #1
SCALE: N.T.S
TYPICAL 5 PLACES

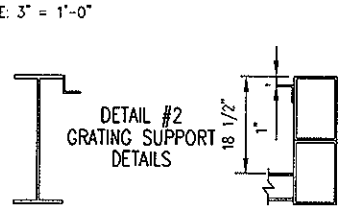

DETAIL #2
GRATING SUPPORT DETAILS

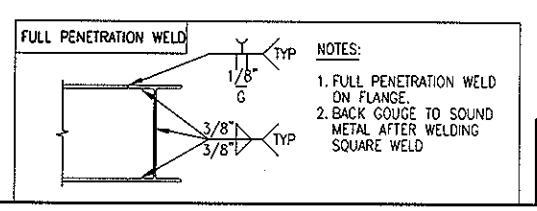

NOTES:
1. FULL PENETRATION WELD ON FLANGE.
2. BACK GOUGE TO SOUND METAL AFTER WELDING SQUARE WELD

GENERAL NOTES:

1. ALL TAIL DIMENSIONS FROM REFERENCE POINT.
2. WEIGHT OF SKID STEEL BASE: 28,000 LBS (MILL TOLERANCES & S.F. NOT APPLIED)
   WEIGHT OF CONCRETE: 14,200 LBS
   TOTAL WEIGHT: 42,000 LBS
3. COPE FLANGES WHERE REQUIRED.
4. ALL WELDS TO BE 1/4" FILLETS ALL AROUND, UNLESS OTHERWISE NOTED.
5. ALL CUT LENGTHS ARE EXACT TOL +0.0"/-0.125" (+0 MM/-3 MM)
6. ALL BOLT HOLES ARE 3/4"ø(19 MMø) UNLESS OTHERWISE NOTED.
7. SURFACE PREP: SP2
   PRIMER: ONE COAT OF FIN-1 RED OXIDE
   PAINT: ONE COAT OF FIN-1
8. ● FULL PENETRATION STRENGTH WELD IS REQ'D.

PROFESSIONAL ENGINEER ALBERTA
BRIAN J. R. SMIT

STEEL BILL OF MATERIAL

MARK	QTY	DESCRIPTION	MATERIAL	LENGTH
1	4	ANGLE,1-1/4" X 1-1/4",1/4" THK	G40.2144W	14
2	4	ANGLE,1-1/4" X 1-1/4",1/4" THK	G40.2144W	18
3	2	ANGLE,1-1/4" X 1-1/4",1/4" THK	G40.2144W	42
4	2	ANGLE,1-1/4" X 1-1/4",1/4" THK	G40.2144W	45
5	1	ANGLE,1-1/4" X 1-1/4",1/4" THK	G40.2144W	51 1/4
6	1	ANGLE,1-1/4" X 1-1/4",1/4" THK	G40.2144W	57 1/4
7	2	ANGLE,1-1/4" X 1-1/4",1/4" THK	G40.2144W	116
8	1	FLAT BAR,2" X 1/2" THK	G40.2144W	19 7/8
9	2	FLAT BAR,3" X 1/2" THK	G40.2144W	18
10	1	FLAT BAR,6" X 1/2" THK	G40.2144W	20
11	2	FLAT BAR,4" X 1/2" THK	G40.2144W	22 1/2
12	2	PLATE,1/2" X 41" X 14"	G40.2144W	41
13	4	PLATE,1/2" X 9" DIA	G40.2144W	9
14	4	PLATE,1-1/2" X 9 1/2" X 4 1/2"	G40.2144W	9 1/2
15	1	PLATE,1/4" X 115 7/8" X 37 1/2"	G40.2144W	116
16	1	PLATE,1/4" X 32 7/8" X 32"	G40.2144W	32 15/16
17	1	PLATE,1/4" X 76 7/8" X 32"	G40.2144W	77
18	1	PLATE,1/4" X 83" X 51 1/8"	G40.2144W	83 1/8
19	1	PLATE,1/4" X 83" X 57 1/8"	G40.2144W	83 1/16
20	1	PLATE,1/4",SMOOTH X 18 X 12	G40.2144W	18
21	1	PLATE,1/4",SMOOTH X 32 X 19 7/8	G40.2144W	32
22	1	PLATE,1/4",SMOOTH X 42 1/8 X 32	G40.2144W	42 1/8
23	2	PLATE,3/8" X 20" X 14"	G40.2144W	20
24	4	PLATE,3/8" X 23 1/4" X 7 1/4"	G40.2144W	23 1/4
25	1	PLATE,3/8" X 25 7/8" X 13"	G40.2144W	25 15/16
26	1	PLATE,3/8" X 32 7/8" X 13"	G40.2144W	33
27	5	WIDE FLANGE,12" X 40#	G40.2150W	8
28	4	TUBING,12"X8",3/8" THK	G40.21350W	480
29	3	TUBING,2"X2",1/4" THK	G40.21350W	19 1/4
30	1	TUBING,2"X2",1/4" THK	G40.21350W	23 3/4
31	1	TUBING,2"X2",1/4" THK	G40.21350W	40 9/16
32	3	TUBING,2"X2",1/4" THK	G40.21350W	43 1/8
33	1	TUBING,2"X2",1/4" THK	G40.21350W	44 5/8
34	2	TUBING,2"X2",1/4" THK	G40.21350W	51 7/8
35	2	TUBING,2"X2",1/4" THK	G40.21350W	55 3/4
36	1	TUBING,2"X2",1/4" THK	G40.21350W	57 1/4
37	2	TUBING,2"X2",1/4" THK	G40.21350W	57 5/16
38	2	TUBING,2"X2",1/4" THK	G40.21350W	58 11/16
39	8	WIDE FLANGE,24" X 84#	G40.2150W	40 9/16
40	11	WIDE FLANGE,24" X 84#	G40.2150W	87 3/8
41	1	WIDE FLANGE,24" X 84#	G40.2150W	124 1/2
42	2	WIDE FLANGE,24" X 84#	G40.2150W	532
43	1	WIDE FLANGE,4" X 13#	G40.2150W	30 7/8
44	1	WIDE FLANGE,4" X 13#	G40.2150W	32 1/8
45	1	WIDE FLANGE,4" X 13#	G40.2150W	41 13/16
46	2	WIDE FLANGE,4" X 13#	G40.2150W	45 1/8
47	5	WIDE FLANGE,4" X 13#	G40.2150W	87 3/8
48	2	WIDE FLANGE,6" X 15#	G40.2150W	87 3/8
49	1	WIDE FLANGE,8" X 31#	G40.2150W	40 9/16
50	SHOP	GRATING,1" X 3/16"	SA-36	(C.T.S.)
51	SHOP	GRATING,1" X 3/16"	SA-36	(C.T.S.)
52	SHOP	GRATING,1" X 3/16"	SA-36	(C.T.S.)
53	SHOP	CONCRETE: 109 FT3	-	-
61	2	WIDE FLANGE,4" X 13#	G40.2150W	65 3/4
62	1	PLATE,1/4",SMOOTH X 30 X 30	G40.2144W	30
63	1	PLATE,1/4",SMOOTH X 38 7/16 X 22 15/16	G40.2144W	38 7/16
~~64~~	~~2~~	~~WIDE FLANGE,4" X 13#~~	~~G40.2150W~~	~~44 5/8~~
64	1	PLATE,1/4",SMOOTH X 15 1/2 X 15	G40.2144W	15 1/2
65	2	WIDE FLANGE,24" X 84#	G40.2150W	24

PIPING BILL OF MATERIAL

MARK	QTY	DESCRIPTION	SIZE	LENGTH
54	1	PIPE,1",S/80(XS),SMLS,SA-106-B (CUT IN HALF)		12
55	1	PIPE,1",S/80(XS),SMLS,SA-106-B (CUT IN HALF)		22
56	2	PIPE,2",S/40(STD),SMLS,SA-106-B		27 1/2
57	2	PIPE,6",S/80(XS),SMLS,SA-106-B		63
58	2	CAP,2",3000#,NPT,SA-105N		
59	6	COUPLING,2",3000#,NPT,FULL,SA-105N		
60	4	PLUG,2",3000#,NPT,HEX,SA-105N		

RELEASED FOR FABRICATION
NAME K. WALTON DATE 15/07/10

PERMIT TO PRACTISE APEGGA PERMIT: No. P8651

REV	DESCRIPTION	DATE	BY	APR
2	FULL DEPTH AREA ADDED	15/07/10	KW	AR
1	PUMPOUT REVISED AS SHOWN/BEAMS ADDED	08/07/10	KW	AR
0	ISSUED FOR CONSTRUCTION	05/07/10	KW	AR

DATE 07/06/10 | SCALE 1/2" = 1'-0"
DRAWN BY K. WALTON | CHECKED BY A. DOSSS | APPROVED BY A. DOSSS
CUST PO N/A
STEP CODE N/A

FOR HUSKY OIL OPERATIONS
CATERPILLAR G3516LE-AFRC
ARIEL RG357M

ENERFLEX
10121 - BARLOW TRAIL N.E.
CALGARY ALBERTA CANADA

TITLE STRUCTURAL STEEL LAYOUT & DETAILS

DWG NO 12518-301 | SHT 1 | REV 2

THE INFORMATION CONTAINED HEREIN IS THE CONFIDENTIAL PROPERTY OF TOKOMONT ENERGY SYSTEMS AND IS NOT FOR PUBLICATION, AND NO PART THEREOF SHALL BE COPIED OR COMMUNICATED TO A THIRD PARTY WITHOUT AUTHORIZATION FROM TOKOMONT ENERGY SYSTEMS

P:\10000 Projects\12517 Husky S1340 G3516LE And RG357M (Jordine)\12517-201-301.dwg
PLOT DATE July 15, 2010

BILL OF MATERIAL				
MARK	QTY	DESCRIPTION	MATERIAL	LENGTH
1	1	PLATE,3/16",CHECKER X 90 1/8 X 72	SA-36	90 1/8"
2	1	PLATE,3/16",CHECKER X 157 1/4 X 49 1/2	SA-36	157 1/4
3	1	PLATE,3/16",CHECKER X 226 3/4 X 90 3/8	SA-36	226 3/4
4	1	PLATE,3/16",CHECKER X 240 1/8 X 90 3/8	SA-36	240 1/8
5	1	PLATE,3/16",CHECKER X 90 1/8 X 72 1/8	SA-36	90 1/8
6	1	FLAT BAR,1" X 1/4" THK	G40.2144W	6
7	1	FLAT BAR,1" X 1/4" THK	G40.2144W	36 9/16
8	1	FLAT BAR,1" X 1/4" THK	G40.2144W	55 9/16
9	1	FLAT BAR,1" X 1/4" THK	G40.2144W	169 7/16
10	1	FLAT BAR,1" X 1/4" THK	G40.2144W	208
11	2	FLAT BAR,1" X 1/4" THK	G40.2144W	223 3/4
12	2	FLAT BAR,1" X 1/4" THK	G40.2144W	361 1/2

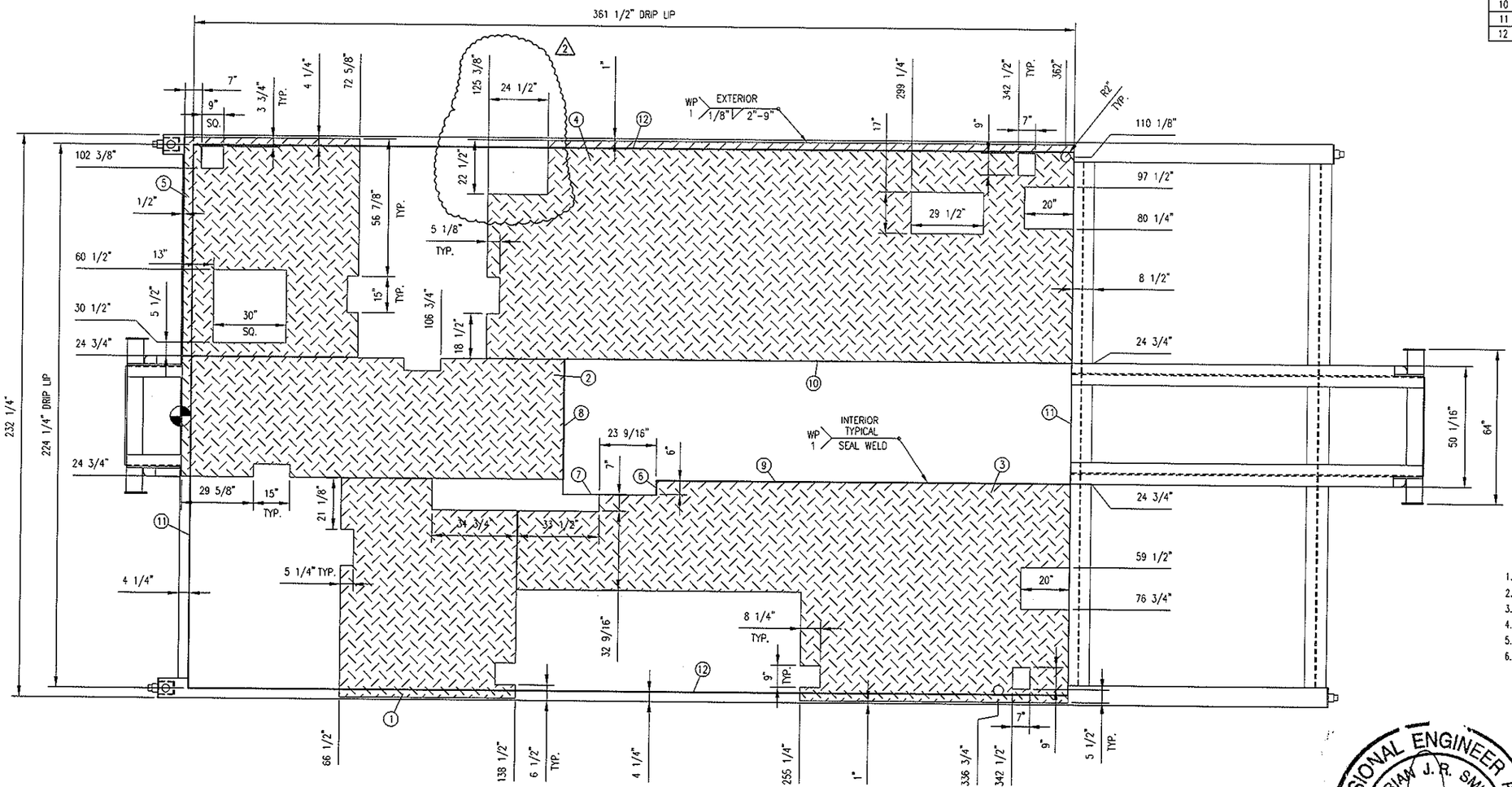

CHECKER PLATE AND DRIP LIP DETAIL

GENERAL NOTES:

1. ALL TAIL DIMENSIONS FROM REFERENCE POINT.
2. COPE FLANGES WHERE REQUIRED.
3. ALL WELDS TO BE 1/4" FILLETS ALL AROUND, UNLESS OTHERWISE NOTED.
4. ALL CUT LENGTHS ARE EXACT TOL +0.0"/-0.125" (+0 MM/-3 MM)
5. ALL BOLT HOLES ARE 3/4"ø(19 MMø) UNLESS OTHERWISE NOTED.
6. SURFACE PREP: SSPC-SP2
   ONE COAT OF FIN-1 RED OXIDE
   ONE COAT OF FIN-1

PROFESSIONAL ENGINEER ALBERTA BRIAN J.R. SMIT

Sept 1/10

RELEASED FOR FABRICATION
NAME X. WALTON DATE 15/07/10

REV	DESCRIPTION	DATE	BY	APR
2	CUTOUT ADDED	15/07/10	KW	AR
1	CUTOUT ADDED	08/07/10	KW	AR
0	ISSUED FOR CONSTRUCTION	05/07/10	KW	AR

DATE 07/06/10 | SCALE 1/2" = 1'-0"
DRAWN BY X. WALTON | CHECKED BY A. ROSS | APPROVED BY A. ROSS
CUST PO N/A
STEP CODE N/A

FOR HUSKY OIL OPERATIONS
CATERPILLAR G3516LE-AFRC
ARIEL RG357M

ENERFLEX
10121 - BARLOW TRAIL N.E.
CALGARY ALBERTA CANADA

PERMIT TO PRACTISE APEGGA PERMIT: No. P8651

TITLE STRUCTURAL STEEL CHECKER PLATE & DRIP LIP DETAIL

DWG NO 12518-301 | SHT 2 | REV 2

THE INFORMATION CONTAINED HEREIN IS THE CONFIDENTIAL PROPERTY OF TORQUMONT ENERGY SYSTEMS AND IS NOT FOR PUBLICATION, AND NO PART THEREOF SHALL BE COPIED OR COMMUNICATED TO A THIRD PARTY WITHOUT AUTHORIZATION FROM TORQUMONT ENERGY SYSTEMS.

P:\10000 Projects\12517 Husky 51340 G3516LE Ariel RG357M\Drafting\12517-201-301.dwg
PLOT DATE July 15, 2010

NOTES:

- **EXTERIOR WALLS TO BE:** 22GA TAN QC8315
- **EXTERIOR ROOF TO BE:** 22GA TAN QC8315
- **EXTERIOR TRIM TO BE:** 22GA METRO BROWN QC8228
- **DOORS TO BE PAINTED:** METRO BROWN QC8228
- **INTERIOR LINER TO BE:** 20GA 10% PERF. WHITE ALUM. OVER 3', 24GA WHITE ALUM. BELOW
- **INSULATION IN WALLS:** R-12 FIBERGLASS BATT
- **INSULATION IN ROOF:** R-20 FIBERGLASS BATT
- **VAPOUR BARRIER TO BE:** 6 MIL

SURFACE AREA =	2284 SQR/FT.
APROX. TOTAL SHIPPING WEIGHT =	9600 Lbs. BUILDING ONLY

- 4 - 18" x 32" MANUALLY OPERABLE LOUVERS c/w BIRD SCREENS
- 3 - 16" VENTURI XP. WALL MOUNTED EXHAUST FAN 115/230v, 1ph, 60hz, 1/4hp (MIN 12 ACPH EACH) CLASS 1, DIV 1, GROUP C&D c/w BACKDRAFTDAMPER & WEATHER HOOD (TO BE INSTALLED)
- 2 - DOUBLE DOOR CANOPIES (SHIP LOOSE)
- 1 - 12" x 12" UTILITY HATCH
- CLIMASEAL FASTENERS THROUGHOUT
- P.ENG. STAMPED BUILDING DWGS. REQ'D.

- DESIGN LOADS: SLAVE LAKE AREA
  ROOF SNOW = 1.620kPa
  1/50 SNOW = 1.9kPa
  1/50 WIND = 0.37kPa

- APX. OVERALL BLDG. DIMENSIONS:
- WIDTH = 247"
- HEIGHT = 235" PLUS SKID

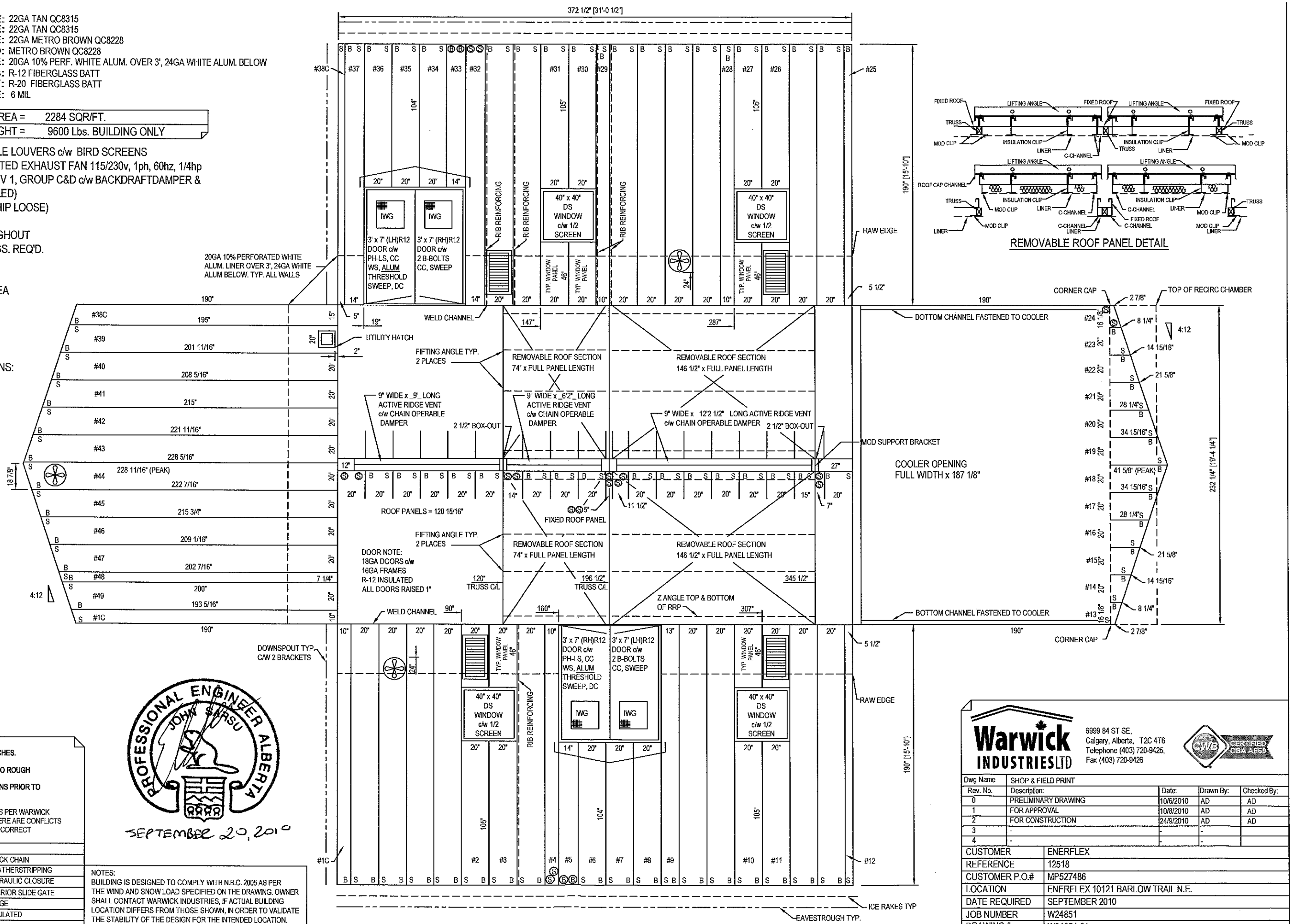

PROFESSIONAL ENGINEER ALBERTA
JOHN SARSU
SEPTEMBER 20, 2010

NOTE:
- ALL DIMENSIONS ARE IN INCHES AND DECIMAL INCHES.
- DO NOT SCALE DRAWINGS.
- ALL DIMENSIONS TO WINDOWS AND DOORS ARE TO ROUGH OPENINGS.
- CONFIRM LOCATION OF ANY LOUVERS AND OR FANS PRIOR TO INSTALLATION
- CENTER BUILDING ON SKID
- BUILDING INSTALLATION & ASSEMBLY SHALL BE AS PER WARWICK INSTALLATION MANUAL, AND DETAILS. WHERE THERE ARE CONFLICTS INFORMATION ON DRAWINGS SHALL BE TAKEN AS CORRECT

LEGEND

DS = DOUBLE GLAZED	CC = CHECK CHAIN
IWG = INDUSTRIAL WIRE GLASS	WS = WEATHERSTRIPPING
RH = RIGHT HAND SWING	DC = HYDRAULIC CLOSURE
LH = LEFT HAND SWING	SG = INTERIOR SLIDE GATE
PH = PANIC HARDWARE	GA = GAUGE
LS = LOCK CYLINDER	INS = INSULATED
R-12 = CORE INSULATION (R-12)	

NOTES:
BUILDING IS DESIGNED TO COMPLY WITH N.B.C. 2005 AS PER THE WIND AND SNOW LOAD SPECIFIED ON THE DRAWING. OWNER SHALL CONTACT WARWICK INDUSTRIES, IF ACTUAL BUILDING LOCATION DIFFERS FROM THOSE SHOWN, IN ORDER TO VALIDATE THE STABILITY OF THE DESIGN FOR THE INTENDED LOCATION.

Warwick INDUSTRIES LTD
6899 84 ST SE,
Calgary, Alberta, T2C 4T6
Telephone (403) 720-9425,
Fax (403) 720-9426

CWB CERTIFIED CSA A660

Dwg Name	SHOP & FIELD PRINT			
Rev. No.	Description:	Date:	Drawn By:	Checked By:
0	PRELIMINARY DRAWING	10/6/2010	AD	AD
1	FOR APPROVAL	10/8/2010	AD	AD
2	FOR CONSTRUCTION	24/9/2010	AD	AD
3	-	-	-	
4	-	-	-	

CUSTOMER	ENERFLEX
REFERENCE	12518
CUSTOMER P.O.#	MP527486
LOCATION	ENERFLEX 10121 BARLOW TRAIL N.E.
DATE REQUIRED	SEPTEMBER 2010
JOB NUMBER	W24851
DRAWING #	W24851-01