THE INFORMATION CONTAINED HEREIN IS THE CONFIDENTIAL PROPERTY OF TOROMONT PROCESS SYSTEMS AND IS NOT FOR PUBLICATION, AND NO PART THEREOF SHALL BE COPIED OR COMMUNICATED TO A THIRD PARTY WITHOUT AUTHORIZATION FROM TOROMONT PROCESS SYSTEMS.

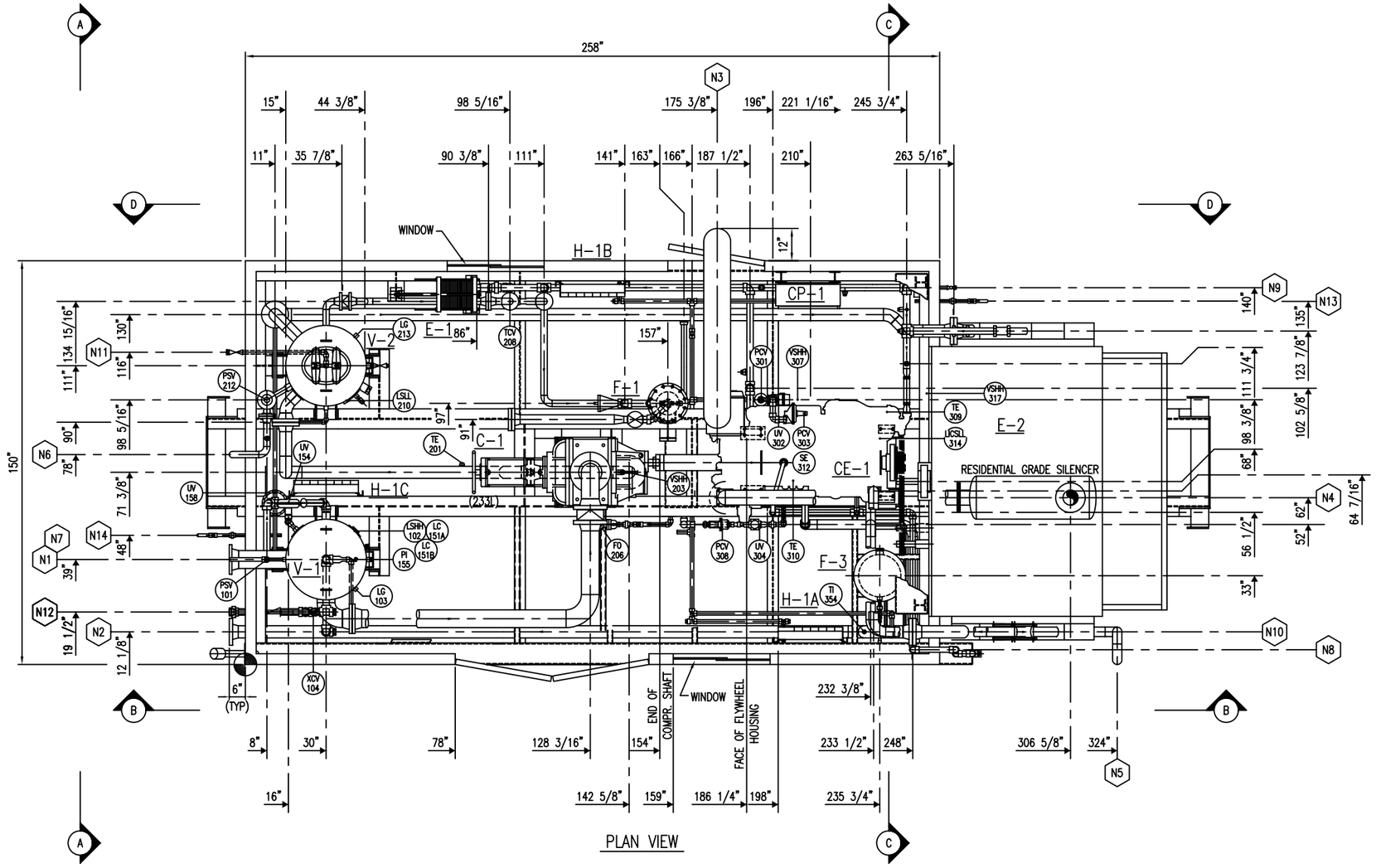

PLAN VIEW

NOZZLE SCHEDULE				
MARK	SERVICE	SIZE	RATING	TYPE
N1	GAS INLET	6"	150#	RFWN
N3	AIR INTAKE	8"	–	TUBING
N4	ENGINE EXHAUST	5"	–	TUBING
N5	STARTER VENT	3"	150#	RFWN
N6	RELIEF VENT	2"	–	PIPE
N7	RELIEF VENT	1"	–	PIPE
N8	CRANKCASE VENT	1 1/2"	3000#	NPT UNION
N9	COOLING WATER/TURBO DRAIN	3/4"	–	VALVE
N10	ENGINE WATER DRAIN	3/4"	–	VALVE
N11	COMPRESSOR OIL DRAIN	1"	3000#	NPT UNION
N12	HYDROCARBON DRAIN	2"	3000#	NPT UNION
N13	INSTRUMENT VENT	3/4"	3000#	NPT UNION
N14	INSTRUMENT VENT	3/4"	3000#	NPT UNION

GENERAL NOTES:

1. ALL TAIL DIMENSIONS FROM REFERENCE POINT.
2. SHIPPING LENGTH: 373"
   SHIPPING WIDTH: 168"
   SHIPPING HEIGHT: 198"
3. SHIPPING WEIGHT: 55000 LBS
4. OPERATING WEIGHT: 56500 LBS
5. OVERALL SKID DEPTH: 18"
   STRUCTURAL STEEL: 18"
   SEAL PAN: 0"
6. NOZZLE ELEVATIONS ARE FROM CENTERLINE OF PIPE TO TOP OF STEEL/GRATING (DATUM).
7. (*) DENOTES ELEVATION FROM FACE OF FLANGE TO TOP OF CHECKER PLATE (DATUM).

REV.	DESCRIPTION	DATE	BY	APPR.
3	AS BUILT	MAR.7/00	PN	
2	ADD COMPRESSOR AND BLOWCASE	JAN.26/00	PN	
1	ISSUED FOR CONSTRUCTION	DEC.16/99	PN	

PERMIT TO PRACTICE STAMP

ENGINEER STAMP

TOROMONT PROCESS SYSTEMS

DRAWN BY: P. NOBLE	DATE: DEC. 16, 1999
CHKD. BY: Z. PAUNOVIC	SCALE: 1/2"-1'-0"
APPR. BY: Z. PAUNOVIC	W.O. No: 10490201
CUST. PO No:	

TITLE: PIPING ARRANGEMENT PLAN VIEW

FOR: CANADIAN HUNTER 325 HP BOOSTER COMPRESSOR

DWG. No: 10490-201 | SHEET No: 1 OF 2 | REV: 3

TPS DATE: JAN 25, 2000 TIME: 2:40 PM

TPS DATE: JAN 25, 2000 TIME: 2:40 PM THE INFORMATION CONTAINED HEREIN IS THE CONFIDENTIAL PROPERTY OF TOROMONT PROCESS SYSTEMS AND IS NOT FOR PUBLICATION, AND NO PART THEREOF SHALL BE COPIED OR COMMUNICATED TO A THIRD PARTY WITHOUT AUTHORIZATION FROM TOROMONT PROCESS SYSTEMS.

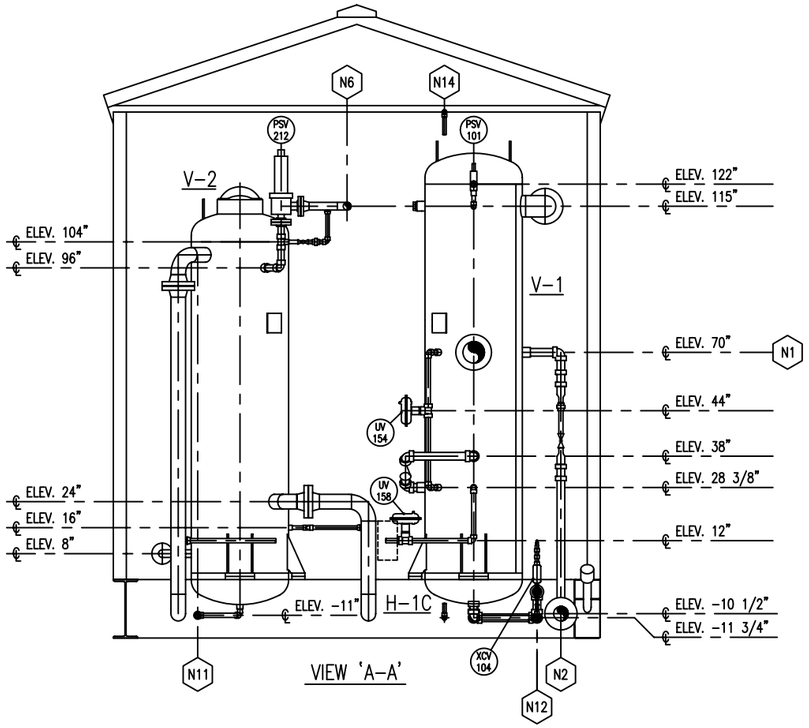

VIEW 'A-A'

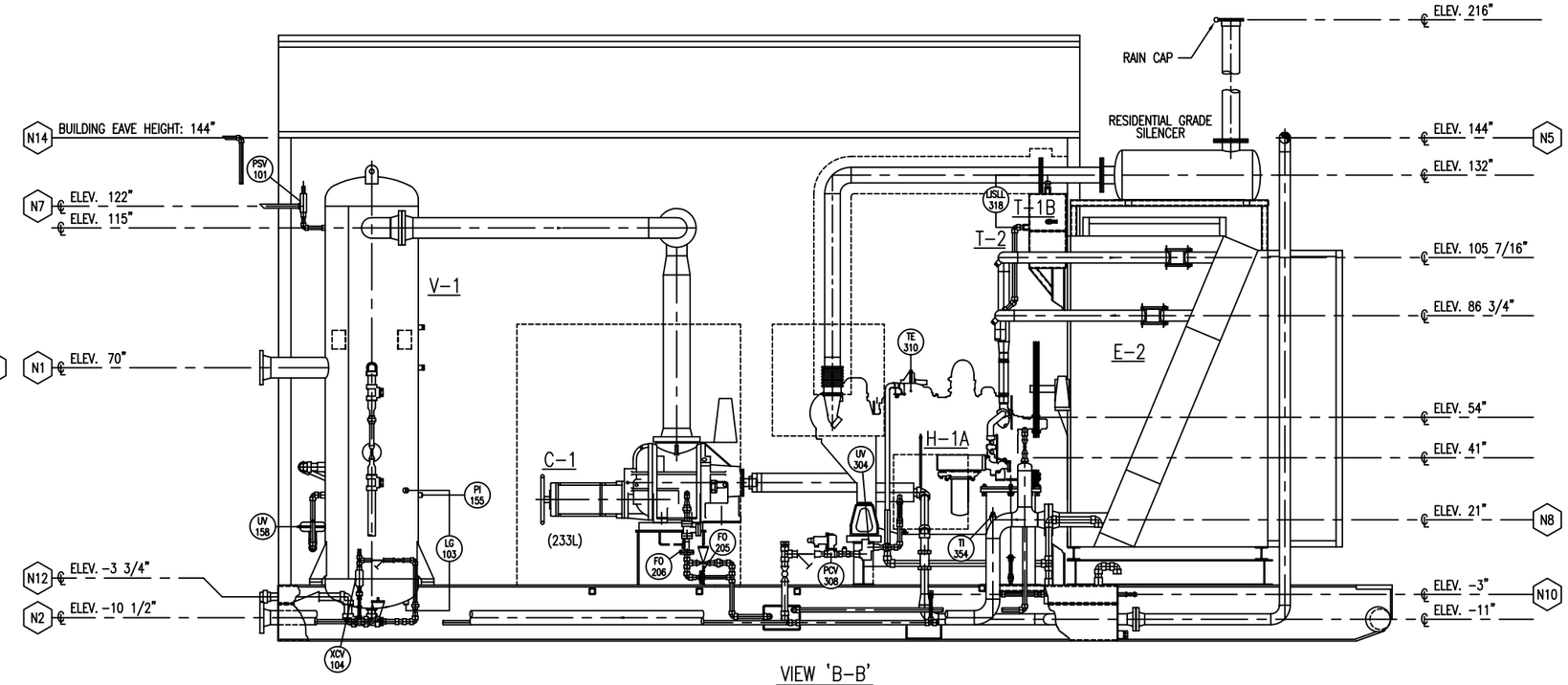

VIEW 'B-B'

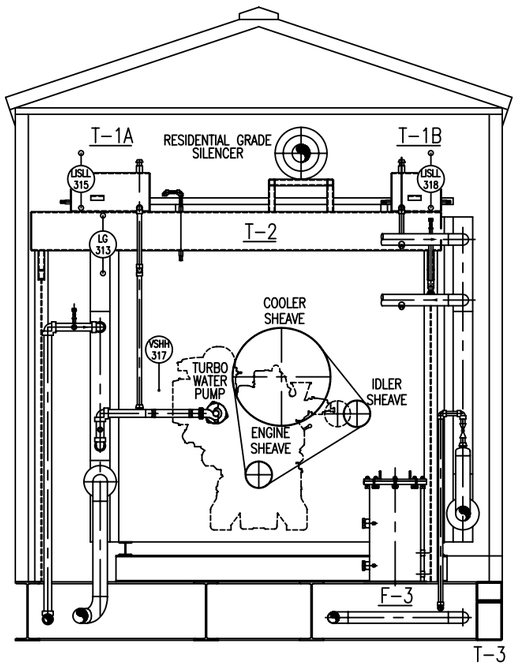

VIEW 'C-C'

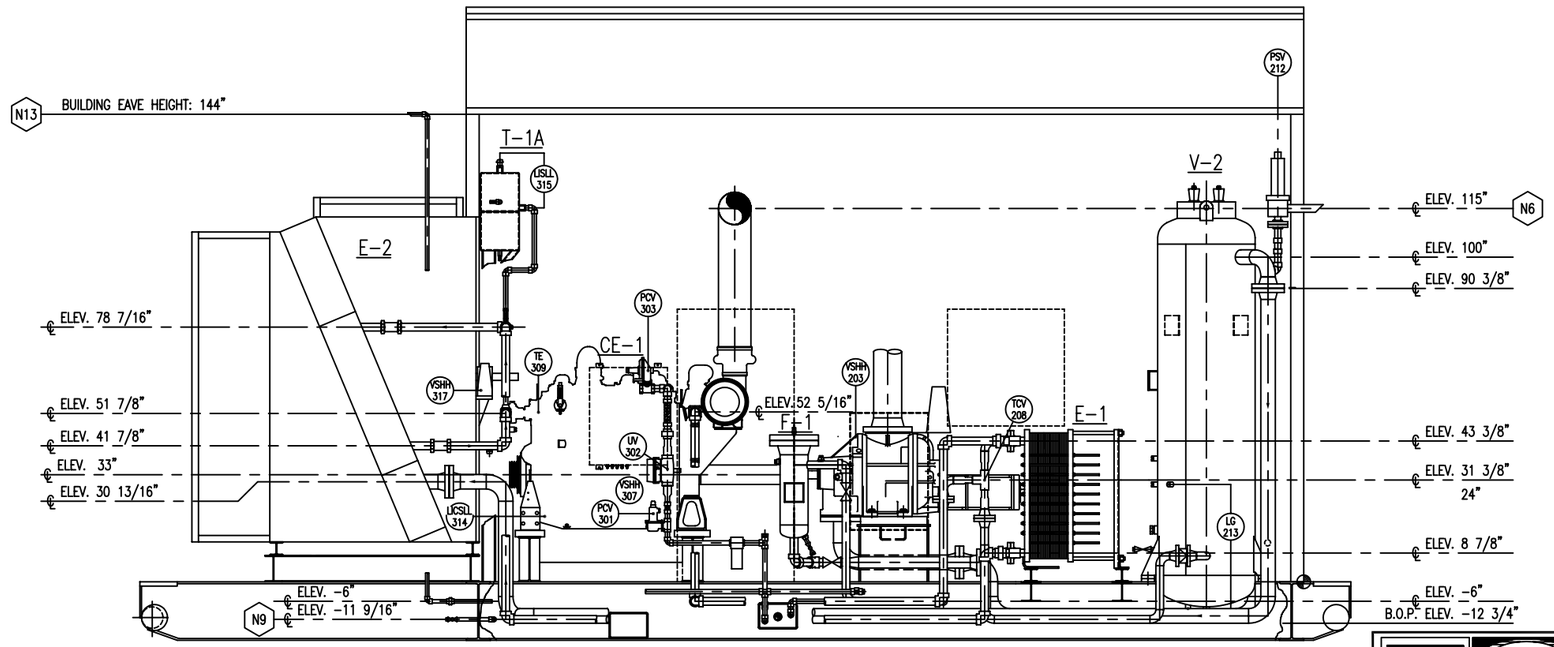

VIEW 'D-D'

REV.	DESCRIPTION	DATE	BY	APPR.
3	AS BUILT	MAR.7/00	PN	
2	ADD COMPRESSOR AND BLOWCASE	JAN.26/00	PN	
1	ISSUED FOR CONSTRUCTION	DEC.16/99	PN	KAS

PERMIT TO PRACTICE STAMP

ENGINEER STAMP

TOROMONT PROCESS SYSTEMS

DRAWN BY: P. NOBLE	DATE: DEC. 16, 1999
CHKD. BY: Z. PAUNOVIC	SCALE: 1/2" = 1'-0'
APPR. BY: Z. PAUNOVIC	W.O. No: 10490201
CUST. PO No:	

TITLE: PIPING ARRANGEMENT ELEVATIONS

FOR: CANADIAN HUNTER 325 HP BOOSTER COMPRESSOR

DWG. No: 10490-201 | SHEET No: 2 OF 2 | REV: 3