WELDERS SYMBOLS

W1	PF	W10	Q	W19	KA	W28	P	W37	T	W46	Q	W55	F	W64	E	W73	.
W2	Q	W11	Q	W20	K	W29	E	W38	P	W47	T	W56	F	W65	E	W74	.
W3	T	W12	AF	W21	CY	W30	T	W39	K	W48	K	W57	F	W66	E	W75	.
W4	T	W13	Q	W22	Q	W31	Q	W40	K	W49	T	W58	F	W67	E	W76	.
W5	Q	W14	W	W23	T	W32	A	W41	CT	W50	K	W59	F	W68	E	W77	.
W6	T	W15	T	W24	T	W33	A	W42	J	W51	T	W60	F	W69	E	W78	.
W7	Q	W16	Q	W25	T	W34	T	W43	T	W52	K	W61	E	W70	E	W79	.
W8	T	W17	T	W26	T	W35	T	W44	K	W53	F	W62	E	W71	.	W80	.
W9	T	W18	A	W27	A	W36	P	W45	T	W54	F	W63	E	W72	P	W81	.

LONGITUDINAL SEAM #1-YF LONGITUDINAL SEAM #2- YF

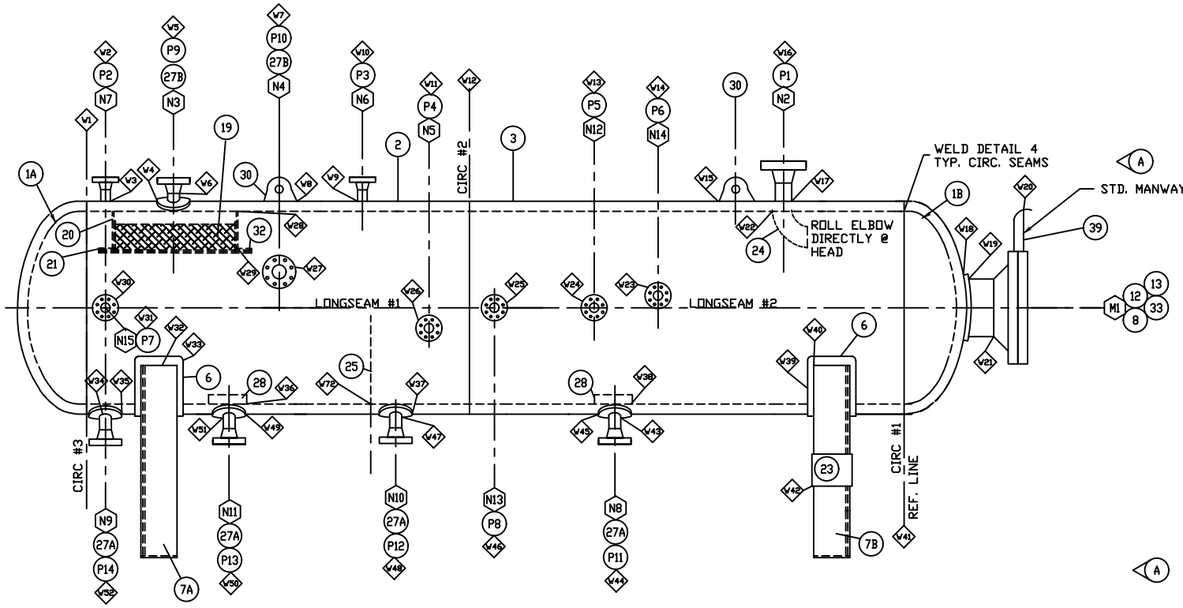

ELEVATION

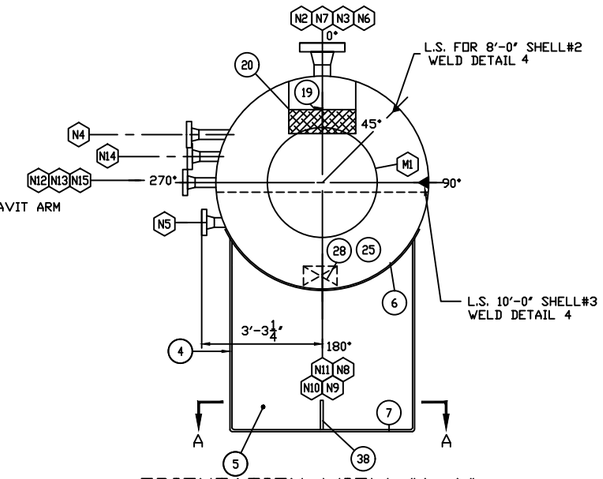

ORIENTATION VIEW "A-A"

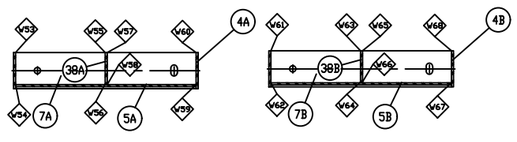

SECTION 'A-A'

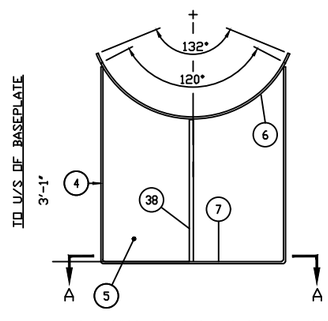

SADDLE ELEVATION

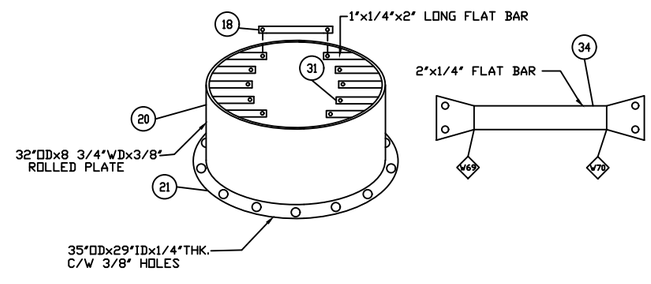

NOTE LOCATION OF REF. SEAM
REFERENCE DWG: DMV-64ID-740 Rev.0
WPS: DEML-4 CCL-6
REMOVABLE MISTEX

BILL OF MATERIALS

MK	QTY.	DESCRIPTION	MATERIAL
1A	1	HEADS:64"ID x 1 3/8" NOM THK. (1.3125" MIN.) 2:1 SE C/W 2" SF	8197412438
1B	1	HEADS:64"ID x 1 3/8" NOM THK. (1.3125" MIN.) 2:1 SE C/W 2" SF	8197412438
2	1	SHELL PLATE: 64"ID x 8'-0" S/S x 1 3/8" THK.	7500T02333
3	1	SHELL PLATE: 64"ID x 10'-0" S/S x 1 3/8" THK.	7864622227
4A	1	SIDE PLATE: 7" x 1/2" THK x 4'-4 1/2" LONG(SHOP FIT)	564958
5A	1	FACE PLATE: 4'-10" x 1/2"THK x 4'-4 1/2"LONG(SHOP FIT)	T35149
6	2	WEAR PLATE: 77"LONG x 10" x 1/2" THK.(ROLL TO 66 3/4"ID)	9744981246
7A	1	BASE PLATE: 4'-10" LONG x 8" x 3/4" THK.	7963T
8	1	PLATE: 20"OD x 1"THK x 12 1/2" LG	793110IC808/1
P1	1	PIPE 6" SMLS SCH XXH x 8" LONG	L70154
N2	1	FLANGE 6" 300# RFWN c/w SCH. XXH BORE	805547
M1	1	MANWAY FLANGE 20" 300# RFWN c/w 18" ID (Sch.80 BORE)	54436
12	1	BLIND FLANGE: 20" 300# RF c/w STUDS 1 1/4" x 7 3/4" LG	62407
13	2	20" 300# RF FLEX GASKETS	.
N5	1	FLANGE 2" 300# RFWN c/w SCH 160 BORE	055466
N6	1	FLANGE 2" 300# RFWN c/w SCH 160 BORE	86TP
N7	1	FLANGE 2" 300# RFWN c/w SCH 160 BORE	86TP
N12	1	FLANGE 2" 300# RFWN c/w SCH 160 BORE	055466
N13	1	FLANGE 2" 300# RFWN c/w SCH 160 BORE	86TP
N14	1	FLANGE 2" 300# RFWN c/w SCH 160 BORE	055466
N15	1	FLANGE 2" 300# RFWN c/w SCH 160 BORE	055466
P2	1	PIPE 2" SMLS SCH 160 x 5" LONG	10248
P3	1	PIPE 2" SMLS SCH 160 x 5" LONG	10248
P4	1	PIPE 2" SMLS SCH 160 x 5" LONG	10248
P5	1	PIPE 2" SMLS SCH 160 x 5" LONG	10248
P6	1	PIPE 2" SMLS SCH 160 x 5" LONG	10248
P7	1	PIPE 2" SMLS SCH 160 x 5" LONG	10248
P8	1	PIPE 2" SMLS SCH 160 x 5" LONG	10248
17	LOT:	1/16" DIAMETER STAINLESS STEEL WIRE	.
18	5	FLAT BAR: 1" WD x 1/4" THK-C.T.S.	1112605
19	1	MISTEX PAD: 30" OD x 6" THK x 9 LBS/CU. FT.-SEE DETAIL	.
20	1	MISTEX SUPPORT: PLATE ROLLED TO 32" OD x3/8" THK x 11 1/4" LG	9745281219
21	1	MISTEX SUPPORT PLATE: 35" OD x 32" ID x 1/4" THK PLATE	567862
22	4	EXPANDED METAL: 1/2" THK x 3 POUNDS/FOOT - C.T.S	.
23	1	NAME PLATE: 10" x 8" x 1/8"	7516T
24	1	INLET DEFLECTOR: 6" 90° LR ELBOW Sch. STD.	00C00006
25	1	WEIR PLATE FLANGE: 63 7/8"OD x 30" HIGHx3/8" THK.-SEE DETAIL.	Y281367
N3	1	FLANGE 3" 300# RFWN c/w SCH.XXH BORE	35492
N4	1	FLANGE 3" 300# RFWN c/w SCH.XXH BORE	35492
N8	1	FLANGE 3" 300# RFWN c/w SCH.XXH BORE	33891
N9	1	FLANGE 3" 300# RFWN c/w SCH.XXH BORE	35492
N10	1	FLANGE 3" 300# RFWN c/w SCH.XXH BORE	35492
N11	1	FLANGE 3" 300# RFWN c/w SCH.XXH BORE	35492
27A	4	REPAD: 7 1/2"OD x 3 5/8"ID x 1/2" THK (ROLLED)	21434943619
27B	2	REPAD: 7 1/2"OD x 3 5/8"ID x 1/2" THK (ROLLED)	7106018653
28	2	VORTEX BREAKERS: 10" x 4" x 1/4" THK STD- SEE DETAIL	2564P59242
P9	1	PIPE 3" SMLS SCH XXH x 6" LONG	47706
P10	1	PIPE 3" SMLS SCH XXH x 6" LONG	47706
P11	1	PIPE 3" SMLS SCH XXH x 6" LONG	47706
P12	1	PIPE 3" SMLS SCH XXH x 6" LONG	47706
P13	1	PIPE 3" SMLS SCH XXH x 6" LONG	47706
P14	1	PIPE 3" SMLS SCH XXH x 6" LONG	47706
30	2	LIFT LUG PLATE: 1" THK x 8" x 10" SEE DETAIL	0314S27571
31	10	FLAT BAR: 1" WD x 1/4" THKx 2" LONG	1112605
32	1	1/4" PLATE: 35" OD x 29"ID c/w EXP. METAL-SEE DETAIL	567862
33	1	REPAD: DISHED 26 1/2"OD x 20 1/8"ID x 1" THK	2189597175
34	1	FLAT BAR: 2" WD x 1/4" x 35" LONG	700212689
38A	1	RIB PLATE: 1/2" THK x 7" x 3'-1" C.T.S.	564958
39	1	DAVIT ARM PLATE: 1" THK	1351263627
4A	1	SIDE PLATE: 7" x 1/2" THK x 4'-4 1/2" LONG(SHOP FIT)	A00623
5A	1	FACE PLATE: 4'-10" x 1/2"THK x 4'-4 1/2"LONG(SHOP FIT)	T35149
7A	1	BASE PLATE: 4'-10" LONG x 8" x 3/4" THK.	7963T
38B	1	RIB PLATE: 1/2" THK x 7" x 3'-1" C.T.S.	A00623

OFFICE MNGR:_____ DATE:_____ LAYOUT DONE BY:_____
ISSUED TO FAB MNGR:_____ DATE:_____ CHECKED BY:_____

DESIGN DATA

DESIGN AND FABRICATE TO ASME CODE, SECTION VIII DIV. 1 2001 EDITION, 2001 ADDENDA
DESIGN PRESSURE & TEMPERATURE: 740 PSIg AT 100°F PREHEAT 200°F
MINIMUM DESIGN METAL TEMPERATURE: -20°F AT 740 PSIg
IMPACT TESTS: EXEMPT AS PER UCS-66(b)(1)(b)/UCS-66(b)(2) & UG-20f(1-5)
PWHT: NONE RADIOGRAPHY: LONG & CIRC SEAMS FULL PER UW-11(a)
HYDROSTATIC TEST PRESSURE 1110 PSIg
HEAD MINIMUM THICKNESS: 1.3125" CORROSION ALLOWANCE: 1/16"
WEIGHT EMPTY: 26,300 LBS WEIGHT FULL OF WATER: 54,600 LBS

MATERIAL SPECIFICATIONS

SHELL SA-516-70N HEADS SA-516-70N
SADDLE SA-36 WELD FITTINGS SA-105N
FLANGES SA-105N NOZZLES SA-106-B SMLS
COUPLINGS/TOL SA-105N INTERNAL PLATE SA-36
INTERNAL PIPE SA-106-B GASKETS 316 S.S.
STUDS/NUTS SA-193-B7M/SA-194-2HM MISC. DATA
REPAD SA-516-70N ALL FVC AND SA-516-70N MATERIALS
ORDERED AS FINE GRAIN PRACTICE

CALC PKG REV.LEVEL	REV. CALCS REQ'D	REV.	DESCRIPTION	BY	DD	PC	QC	DATE
		1	ADD HEAT #'S & WELD SYM.	SG	CP	LP	CK	02-06-04
0	NO	0	ISSUED FOR QC	SG	CP	LP	CK	02-06-04

DELANEY ENERGY MANUFACTURING LTD.
HALKIRK ALBERTA

DATE 02-06-04	CONOCO CANADA RESOURCES LTD. c/o VECO ALLIANCE GROUP		
DESIGNED BY DELANEY			
DRAWN BY S. GORDON	TITLE HORIZONTAL VESSEL V-100 DRAWING 64"ID x 18'-0" S/S 740 PSIg @ 100°F, 1/16" C.A.		
CHECKED BY			
APPROVED BY	PROJECT NO. 1091-001	FILENAME 1091-002	DRN NO. P-9104.2
SCALE N.T.S.	SHEET NO. 1 OF 1	DRAWING NO. V-1091-002QC	REV. NO. 1