Item: Separator Bridle (Right) - Vessel

Technician:

CGSB 48.9712 UT, MT LEVEL II
SNT UT, MT LEVEL II
12288

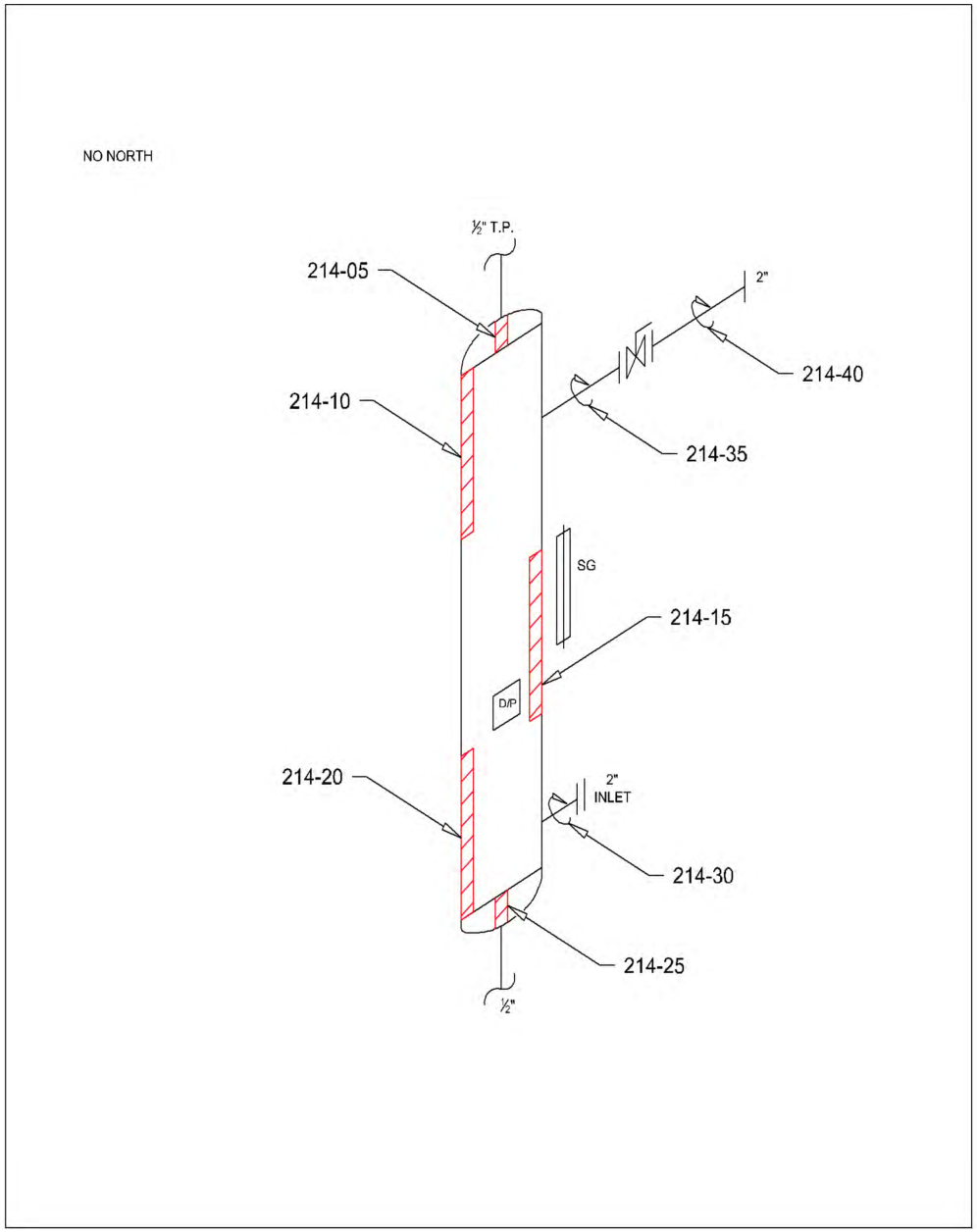

Client:	
LSD:	00-00-000-00W0M
Drawing#:	214
Location:	Blackfalds
Regulatory#:	-
Serial:	F-1091-001B
CRN#:	OH5165.213
NB#:	
Date:	04.07.2021
Job#:	

HUNT INSPECTION LTD.

Item: Separator Bridle (Right) - Data Plate

Technician:
CGSB 48.9712 UT, MT LEVEL II
SNT UT, MT LEVEL II
12288

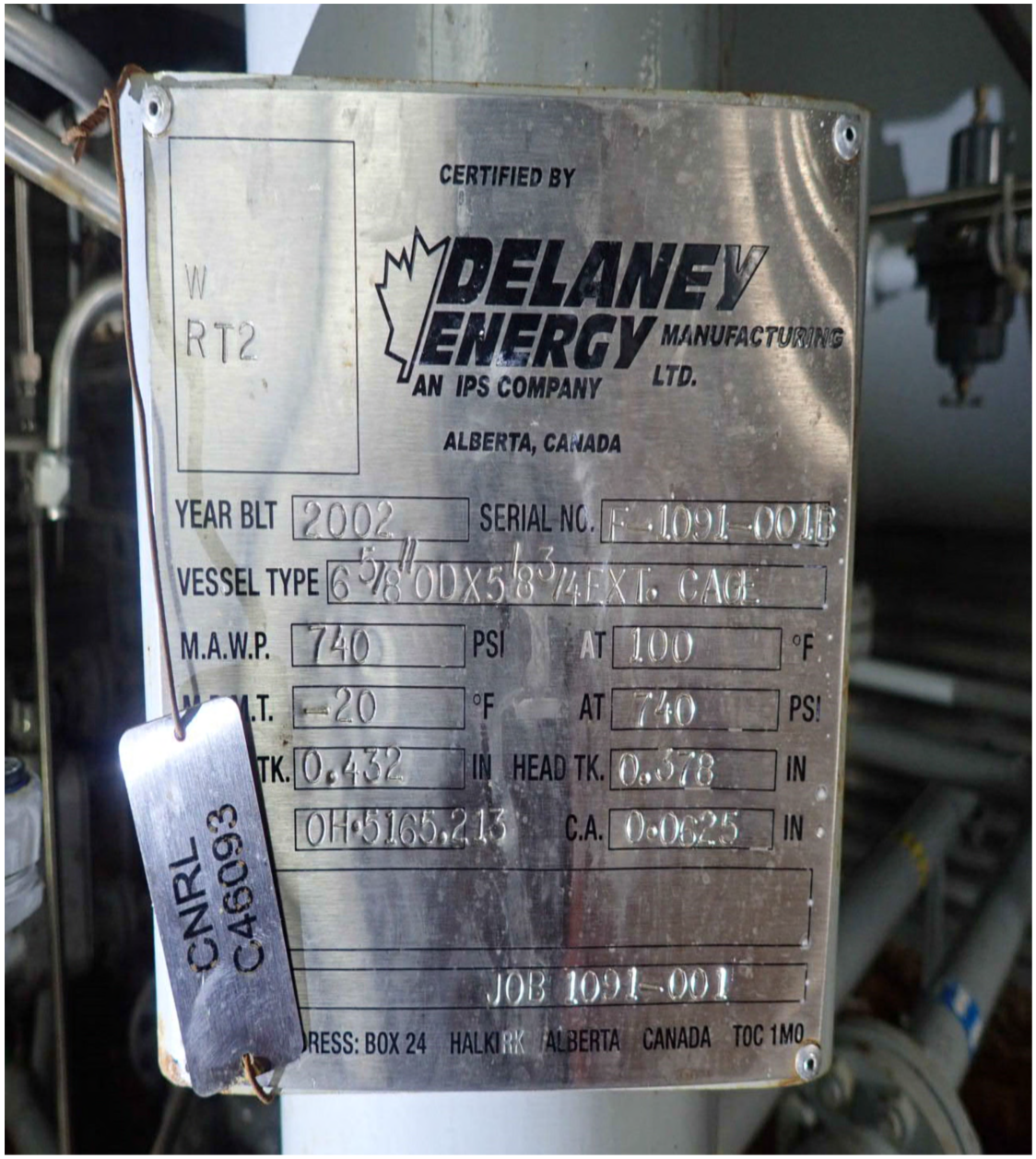

Client:	
LSD:	00-00-000-00W0M
Drawing#:	214A
Location:	Blackfalds
Regulatory#:	-
Serial:	F-1091-001B
CRN#:	OH5165.213
NB#:	
Date:	04.07.2021
Job#:	

HUNT INSPECTION LTD.

STATIC DATA

Date:	04.07.2021	**Vessel Name:**	Separator Bridle (Right)	**Vessel Shell Nom:**	0.432 in
LSD:	00-00-000-00W0M	**Regulatory#:**	-	**Vessel Head Nom:**	0.378 in
Drawing#:	214 **Report#:** 7559	**Serial#:**	F-1091-001B	**- Shell Nom:**	
Inspector:		**CRN#:**	OH5165.213	**- Head Nom:**	
Location:	1 Blackfalds	**NB#:**		**Shell Side MAWP:**	740 psi
District:		**Tag#:**		**Shell Side MAWT:**	100 °F
Process:	Sweet Natural Gas	**Year Built:**	2002	**Tube Side MAWP:**	
-#:	Separator Bldg	**Manufacture:**	Delaney Energy Manufacturing Ltd	**Tube Side MAWT:**	
UT Tech.:	UT 1-1, Rev 7	**Vessel CA:**	0.0625 in	**Radiography:**	RT-2
Surface Cond:	Smooth Painted	**Vessel OD:**	6.625 in	**Code Stamp:**	None
Surface Temp:	50 °F	**AB 506 Vessel Type:**	Sweet Unfired Plant Vessels	**Orientation:**	Vertical
Job#:		**Manway:**	NO	**Insulated:**	NO
Vessel Comment:				**HT:**	NO

TML 214-05

Type	Top Head
Shape	Ellipsoidal
Side	Shell
OD	6.625 in
Code	ASME Sec VIII, Div 1
Material	SA 234 - WPB
Stress	17100 psi
Efficiency	1

UT SURVEY READINGS (in)

	Date	1	2	3	4	5	6
Previous	Apr-21	0.438	0.431	0.465	0.436	0.432	0.514
Current	Apr-21	0.438	0.431	0.465	0.436	0.432	0.514

Concerns: All Readings Acceptable

Comments:

UT RESULT SUMMARY

Nominal	Minimum	Average	T-Min	CA
0.378 in	**0.431 in**	0.453 in	0.128 in	0.0625 in

UT ANALYSIS OF LOW MINIMUM READING

% Below Nom.	0.00	**Short Term C.R.**	
% Below C.A.	0.00	**Long Term C.R.**	
Below T-Min	NO	**Remaining Life**	
Int. Corrosion	NO	**Assumed Nominal**	NO
Int. Erosion	NO	**Assumed Material**	Yes

TML 214-10

Type	Upper Shell
Shape	Cylindrical
Side	Shell
OD	6.625 in
Code	ASME Sec VIII, Div 1
Material	SA 106 - B
Stress	17100 psi
Efficiency	1

UT SURVEY READINGS (in)

	Date	1	2	3	4	5	6
Previous	Apr-21	0.421	0.420	0.419	0.420	0.423	0.425
Current	Apr-21	0.421	0.420	0.419	0.420	0.423	0.425

Concerns: All Readings Acceptable

Comments:

UT RESULT SUMMARY

Nominal	Minimum	Average	T-Min	CA
0.432 in	**0.419 in**	0.421 in	0.128 in	0.0625 in

UT ANALYSIS OF LOW MINIMUM READING

% Below Nom.	3.01	**Short Term C.R.**	
% Below C.A.	0.00	**Long Term C.R.**	
Below T-Min	NO	**Remaining Life**	
Int. Corrosion	NO	**Assumed Nominal**	NO
Int. Erosion	NO	**Assumed Material**	Yes

TML 214-15

Type	Mid Shell
Shape	Cylindrical
Side	Shell
OD	6.625 in
Code	ASME Sec VIII, Div 1
Material	SA 106 - B
Stress	17100 psi
Efficiency	1

UT SURVEY READINGS (in)

	Date	1	2	3	4	5	6
Previous	Apr-21	0.404	0.404	0.399	0.394	0.402	0.434
Current	Apr-21	0.404	0.404	0.399	0.394	0.402	0.434

Concerns: All Readings Acceptable

Comments:

UT RESULT SUMMARY

Nominal	Minimum	Average	T-Min	CA
0.432 in	**0.394 in**	0.406 in	0.128 in	0.0625 in

UT ANALYSIS OF LOW MINIMUM READING

% Below Nom.	8.80	**Short Term C.R.**	
% Below C.A.	0.00	**Long Term C.R.**	
Below T-Min	NO	**Remaining Life**	
Int. Corrosion	NO	**Assumed Nominal**	NO
Int. Erosion	NO	**Assumed Material**	Yes

HUNT INSPECTION LTD.

STATIC DATA

Date:	04.07.2021	**Vessel Name:**	Separator Bridle (Right)	**Regulatory#:**	-
LSD:	00-00-000-00W0M	**Location:**	Blackfalds	**Serial:**	F-1091-001B
Drawing#:	214	**Job#:**		**CRN#:**	OH5165.213

TML 214-20

Type	Lower Shell	**Date**		1	2	3	4	5	6
Shape	Cylindrical	Apr-21		0.415	0.409	0.399	0.397	0.395	0.410
Side	Shell		**Previous**						
OD	6.625 in	Apr-21	**Current**	0.415	0.409	0.399	0.397	0.395	0.410
Code	ASME Sec VIII, Div 1		**Concerns**	All Readings Acceptable					
Material	SA 106 - B								
Stress	17100 psi								
Efficiency	1		**Comments**	Apr-21: WALL LOSS					

UT SURVEY READINGS (in)

UT RESULT SUMMARY

Nominal	Minimum	Average	T-Min	CA
0.432 in	**0.395 in**	0.404 in	0.128 in	0.0625 in

UT ANALYSIS OF LOW MINIMUM READING

% Below Nom.	8.56	**Short Term C.R.**	
% Below C.A.	0.00	**Long Term C.R.**	
Below T-Min	NO	**Remaining Life**	
Int. Corrosion	NO	**Assumed Nominal**	NO
Int. Erosion	NO	**Assumed Material**	Yes

TML 214-25

Type	Bottom Head	**Date**		1	2	3	4	5	6
Shape	Ellipsoidal	Apr-21		0.451	0.418	0.418	0.417	0.414	0.471
Side	Shell		**Previous**						
OD	6.625 in	Apr-21	**Current**	0.451	0.418	0.418	0.417	0.414	0.471
Code	ASME Sec VIII, Div 1		**Concerns**	All Readings Acceptable					
Material	SA 234 - WPB								
Stress	17100 psi								
Efficiency	1		**Comments**						

UT SURVEY READINGS (in)

UT RESULT SUMMARY

Nominal	Minimum	Average	T-Min	CA
0.378 in	**0.414 in**	0.432 in	0.128 in	0.0625 in

UT ANALYSIS OF LOW MINIMUM READING

% Below Nom.	0.00	**Short Term C.R.**	
% Below C.A.	0.00	**Long Term C.R.**	
Below T-Min	NO	**Remaining Life**	
Int. Corrosion	NO	**Assumed Nominal**	NO
Int. Erosion	NO	**Assumed Material**	Yes

TML 214-30

Type	Inlet Nozzle	**Date**		1	2	3	4	5	6
Shape	Cylindrical	Apr-21		0.237	0.223	0.213	0.201	0.201	0.212
Side	Shell		**Previous**						
OD	2.375 in SCH XS	Apr-21	**Current**	0.237	0.223	0.213	0.201	0.201	0.212
Code	ASME Sec VIII, Div 1		**Concerns**	All Readings Acceptable					
Material	SA 106 - B								
Stress	17100 psi								
Efficiency	1		**Comments**						

UT SURVEY READINGS (in)

UT RESULT SUMMARY

Nominal	Minimum	Average	T-Min	CA
0.218 in	**0.201 in**	0.214 in	0.043 in	0.0625 in

UT ANALYSIS OF LOW MINIMUM READING

% Below Nom.	7.80	**Short Term C.R.**	
% Below C.A.	0.00	**Long Term C.R.**	
Below T-Min	NO	**Remaining Life**	
Int. Corrosion	NO	**Assumed Nominal**	NO
Int. Erosion	NO	**Assumed Material**	NO

TML 214-35

Type	Nozzle	**Date**		1	2	3	4	5	6
Shape	Cylindrical	Apr-21		0.224	0.224	0.225	0.232	0.218	0.216
Side	Shell		**Previous**						
OD	2.375 in SCH XS	Apr-21	**Current**	0.224	0.224	0.225	0.232	0.218	0.216
Code	ASME Sec VIII, Div 1		**Concerns**	All Readings Acceptable					
Material	SA 106 - B								
Stress	17100 psi								
Efficiency	1		**Comments**						

UT SURVEY READINGS (in)

UT RESULT SUMMARY

Nominal	Minimum	Average	T-Min	CA
0.218 in	**0.216 in**	0.223 in	0.043 in	0.0625 in

UT ANALYSIS OF LOW MINIMUM READING

% Below Nom.	0.92	**Short Term C.R.**	
% Below C.A.	0.00	**Long Term C.R.**	
Below T-Min	NO	**Remaining Life**	
Int. Corrosion	NO	**Assumed Nominal**	NO
Int. Erosion	NO	**Assumed Material**	NO

HUNT INSPECTION LTD.

STATIC DATA

Date:	04.07.2021	**Vessel Name:**	Separator Bridle (Right)	**Regulatory#:**	-
LSD:	00-00-000-00W0M	**Location:**	, Blackfalds	**Serial:**	F-1091-001B
Drawing#:	214	**Job#:**		**CRN#:**	OH5165.213

TML	**214-40**	
Type		Nozzle
Shape	Cylindrical	
Side	Shell	
OD	2.375 in	SCH 160
Code	ASME Sec VIII, Div 1	
Material	SA 106 - B	
Stress	17100 psi	
Efficiency	1	

UT SURVEY READINGS (in)

	Date	1	2	3	4	5	6
Previous	Apr-21	0.345	0.342	0.341	0.361	0.350	0.358
Current	Apr-21	0.345	0.342	0.341	0.361	0.350	0.358

Concerns All Readings Acceptable

Comments

UT RESULT SUMMARY

Nominal	**Minimum**	**Average**	**T-Min**	**CA**
0.343 in	**0.341 in**	0.350 in	0.038 in	0.0625 in

UT ANALYSIS OF LOW MINIMUM READING

% Below Nom.	0.58	**Short Term C.R.**	
% Below C.A.	0.00	**Long Term C.R.**	
Below T-Min	NO	**Remaining Life**	
Int. Corrosion	NO	**Assumed Nominal**	NO
Int. Erosion	NO	**Assumed Material**	NO