# Item: Separator Bridle (Left) - Vessel

**Technician:**

CGSB 48.9712 UT, MT LEVEL II
SNT UT, MT LEVEL II
12288

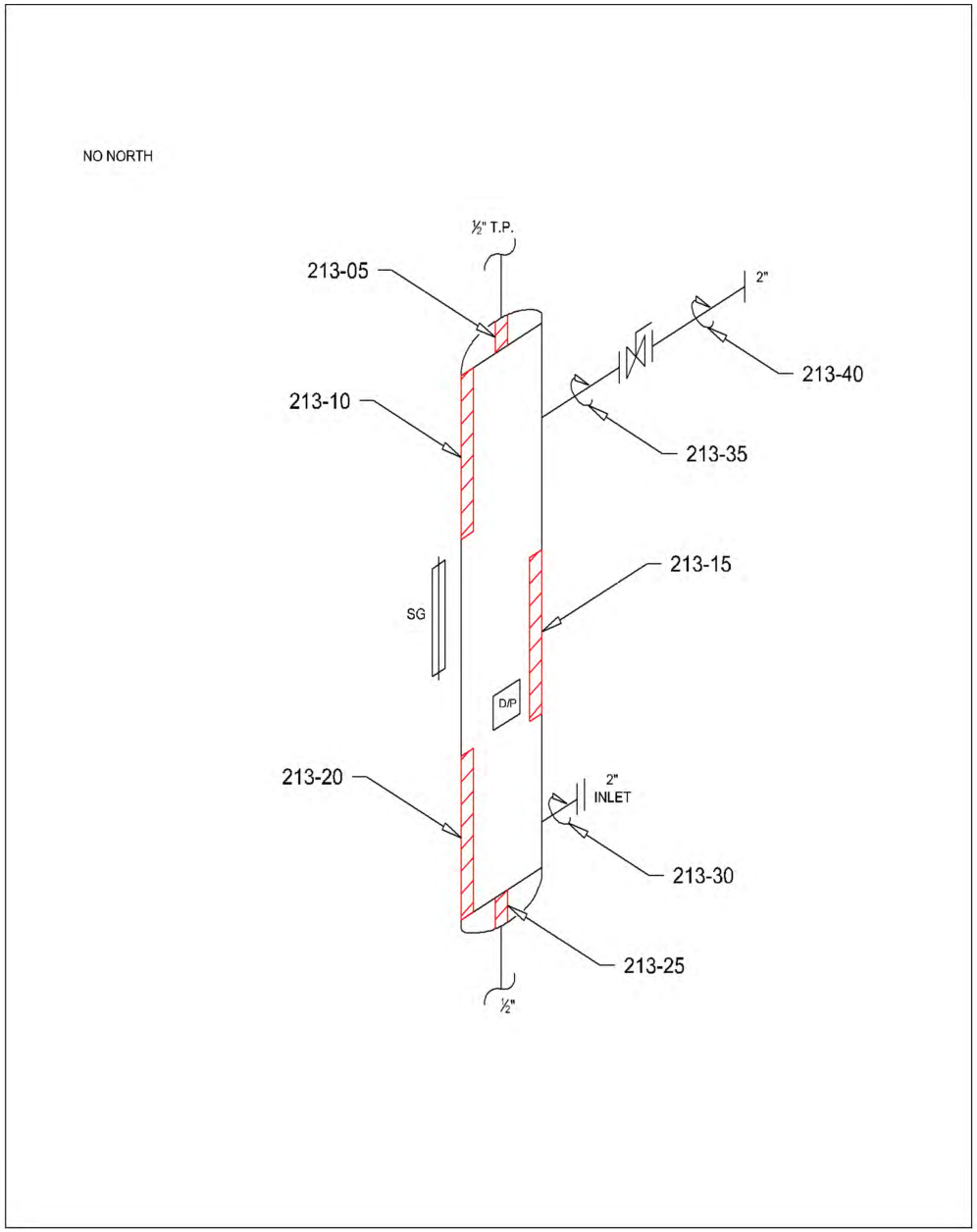

| | |
|---|---|
| **Client:** | |
| **LSD:** | 00-00-000-00W0M |
| **Drawing#:** | 213 |
| **Location:** | Blackfalds |
| **Regulatory#:** | - |
| **Serial:** | F-1091-001A |
| **CRN#:** | OH5165.213 |
| **NB#:** | |
| **Date:** | 04.07.2021 |
| **Job#:** | |

HUNT INSPECTION LTD.

# Item: Separator Bridle (Left) - Data Plate

**Technician:**
CGSB 48.9712 UT, MT LEVEL II
SNT UT, MT LEVEL II
12288

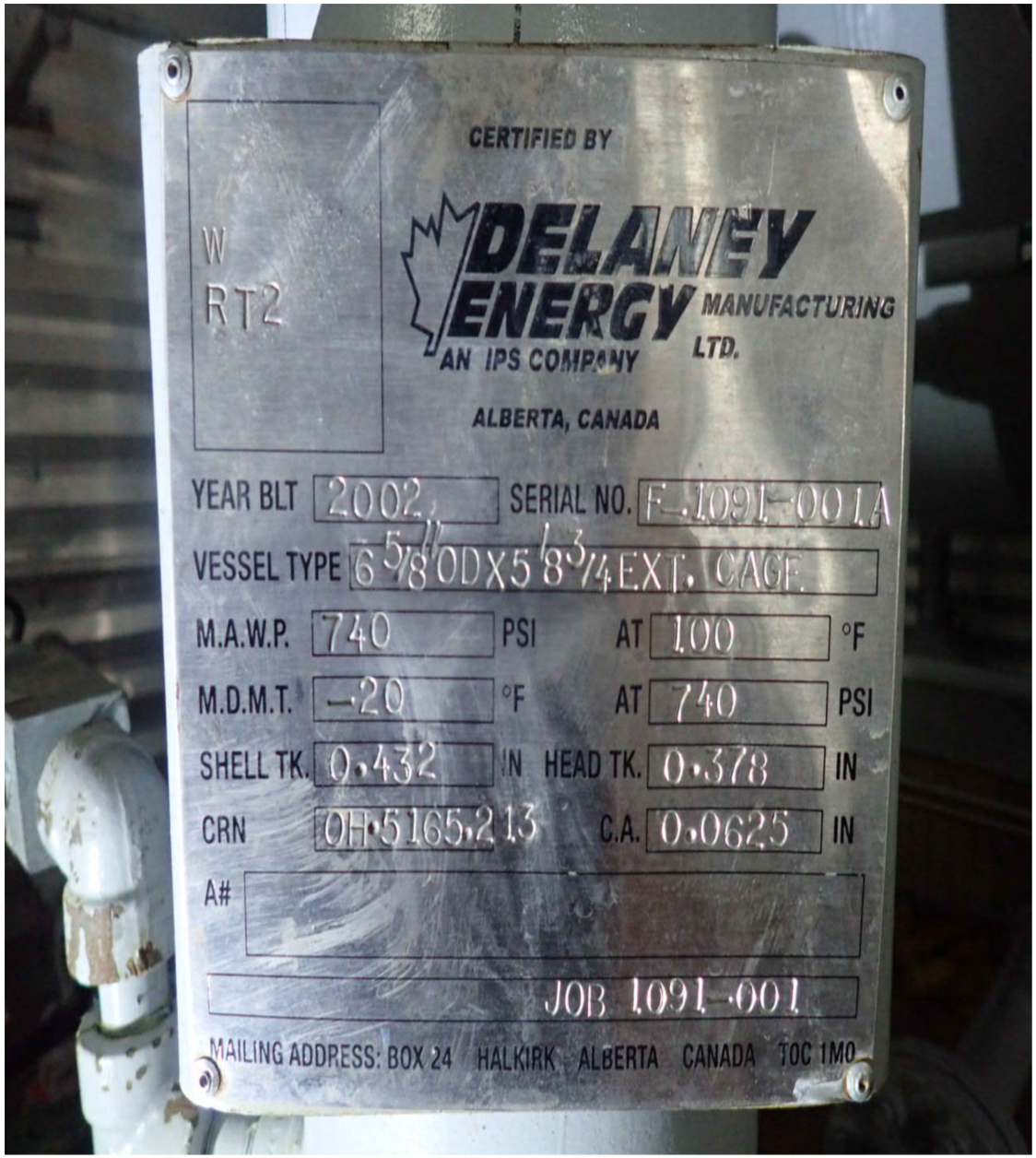


| | |
|---|---|
| **Client:** | |
| **LSD:** | 00-00-000-00W0M |
| **Drawing#:** | 213A |
| **Location:** | Blackfalds |
| **Regulatory#:** | - |
| **Serial:** | F-1091-001A |
| **CRN#:** | OH5165.213 |
| **NB#:** | |
| **Date:** | 04.07.2021 |
| **Job#:** | |

HUNT INSPECTION LTD.

## STATIC DATA

| | | | | | |
|---|---|---|---|---|---|
| **Date:** | 04.07.2021 | **Vessel Name:** | Separator Bridle (Left) | **Vessel Shell Nom:** | 0.432 in |
| **LSD:** | 00-00-000-00W0M | **Regulatory#:** | - | **Vessel Head Nom:** | 0.378 in |
| **Drawing#:** | 213 **Report#:** 7558 | **Serial#:** | F-1091-001A | **- Shell Nom:** | |
| **Inspector:** | | **CRN#:** | OH5165.213 | **- Head Nom:** | |
| **Location:** | , Blackfalds | **NB#:** | | **Shell Side MAWP:** | 740 psi |
| **District:** | | **Tag#:** | | **Shell Side MAWT:** | 100 °F |
| **Process:** | Sweet Natural Gas | **Year Built:** | 2002 | **Tube Side MAWP:** | |
| **-#:** | Separator Bldg | **Manufacture:** | Delaney Energy Manufacturing Ltd | **Tube Side MAWT:** | |
| **UT Tech.:** | UT 1-1, Rev 7 | **Vessel CA:** | 0.0625 in | **Radiography:** | RT-2 |
| **Surface Cond:** | Smooth Painted | **Vessel OD:** | 6.625 in | **Code Stamp:** | None |
| **Surface Temp:** | 50 °F | **AB 506 Vessel Type:** | Sweet Unfired Plant Vessels | **Orientation:** | Vertical |
| **Job#:** | | **Manway:** | NO | **Insulated:** | NO |
| **Vessel Comment:** | | | | **HT:** | NO |

### TML 213-05

| | |
|---|---|
| **Type** | Top Head |
| **Shape** | Ellipsoidal |
| **Side** | Shell |
| **OD** | 6.625 in |
| **Code** | ASME Sec VIII, Div 1 |
| **Material** | SA 234 - WPB |
| **Stress** | 17100 psi |
| **Efficiency** | 1 |

**UT SURVEY READINGS (in)**

| | Date | 1 | 2 | 3 | 4 | 5 | 6 |
|---|---|---|---|---|---|---|---|
| Previous | Apr-21 | 0.448 | 0.435 | 0.460 | 0.429 | 0.429 | 0.503 |
| Current | Apr-21 | 0.448 | 0.435 | 0.460 | 0.429 | 0.429 | 0.503 |

**Concerns** All Readings Acceptable

**Comments**

**UT RESULT SUMMARY**

| Nominal | Minimum | Average | T-Min | CA |
|---|---|---|---|---|
| 0.378 in | **0.429 in** | 0.451 in | 0.128 in | 0.0625 in |

**UT ANALYSIS OF LOW MINIMUM READING**

| | | | |
|---|---|---|---|
| **% Below Nom.** | 0.00 | **Short Term C.R.** | |
| **% Below C.A.** | 0.00 | **Long Term C.R.** | |
| **Below T-Min** | NO | **Remaining Life** | |
| **Int. Corrosion** | NO | **Assumed Nominal** | NO |
| **Int. Erosion** | NO | **Assumed Material** | Yes |

### TML 213-10

| | |
|---|---|
| **Type** | Upper Shell |
| **Shape** | Cylindrical |
| **Side** | Shell |
| **OD** | 6.625 in |
| **Code** | ASME Sec VIII, Div 1 |
| **Material** | SA 106 - B |
| **Stress** | 17100 psi |
| **Efficiency** | 1 |

**UT SURVEY READINGS (in)**

| | Date | 1 | 2 | 3 | 4 | 5 | 6 |
|---|---|---|---|---|---|---|---|
| Previous | Apr-21 | 0.385 | 0.387 | 0.388 | 0.393 | 0.393 | 0.393 |
| Current | Apr-21 | 0.385 | 0.387 | 0.388 | 0.393 | 0.393 | 0.393 |

**Concerns** All Readings Acceptable

**Comments** Apr-21: WALL LOSS

**UT RESULT SUMMARY**

| Nominal | Minimum | Average | T-Min | CA |
|---|---|---|---|---|
| 0.432 in | **0.385 in** | 0.390 in | 0.128 in | 0.0625 in |

**UT ANALYSIS OF LOW MINIMUM READING**

| | | | |
|---|---|---|---|
| **% Below Nom.** | 10.88 | **Short Term C.R.** | |
| **% Below C.A.** | 0.00 | **Long Term C.R.** | |
| **Below T-Min** | NO | **Remaining Life** | |
| **Int. Corrosion** | NO | **Assumed Nominal** | NO |
| **Int. Erosion** | NO | **Assumed Material** | Yes |

### TML 213-15

| | |
|---|---|
| **Type** | Mid Shell |
| **Shape** | Cylindrical |
| **Side** | Shell |
| **OD** | 6.625 in |
| **Code** | ASME Sec VIII, Div 1 |
| **Material** | SA 106 - B |
| **Stress** | 17100 psi |
| **Efficiency** | 1 |

**UT SURVEY READINGS (in)**

| | Date | 1 | 2 | 3 | 4 | 5 | 6 |
|---|---|---|---|---|---|---|---|
| Previous | Apr-21 | 0.474 | 0.473 | 0.471 | 0.466 | 0.464 | 0.463 |
| Current | Apr-21 | 0.474 | 0.473 | 0.471 | 0.466 | 0.464 | 0.463 |

**Concerns** All Readings Acceptable

**Comments**

**UT RESULT SUMMARY**

| Nominal | Minimum | Average | T-Min | CA |
|---|---|---|---|---|
| 0.432 in | **0.463 in** | 0.468 in | 0.128 in | 0.0625 in |

**UT ANALYSIS OF LOW MINIMUM READING**

| | | | |
|---|---|---|---|
| **% Below Nom.** | 0.00 | **Short Term C.R.** | |
| **% Below C.A.** | 0.00 | **Long Term C.R.** | |
| **Below T-Min** | NO | **Remaining Life** | |
| **Int. Corrosion** | NO | **Assumed Nominal** | NO |
| **Int. Erosion** | NO | **Assumed Material** | Yes |

HUNT INSPECTION LTD.

## STATIC DATA

| | | | | | |
|---|---|---|---|---|---|
| **Date:** | 04.07.2021 | **Vessel Name:** | Separator Bridle (Left) | **Regulatory#:** | - |
| **LSD:** | 00-00-000-00W0M | **Location:** | Blackfalds | **Serial:** | F-1091-001A |
| **Drawing#:** | 213 | **Job#:** | | **CRN#:** | OH5165.213 |

| **TML** | **213-20** | | | | | | | | | | | |
|---|---|---|---|---|---|---|---|---|---|---|---|---|
| **Type** | Lower | Shell | **Date** | | **UT SURVEY READINGS (in)** | | | | | | **UT RESULT SUMMARY** | |
| **Shape** | Cylindrical | | Apr-21 | | 1 | 2 | 3 | 4 | 5 | 6 | **Nominal** | **Minimum** |
| **Side** | Shell | | | **Previous** | 0.425 | 0.424 | 0.410 | 0.409 | 0.401 | 0.413 | 0.432 in | **0.401 in** |
| **OD** | 6.625 in | | Apr-21 | **Current** | 0.425 | 0.424 | 0.410 | 0.409 | 0.401 | 0.413 | **UT ANALYSIS OF LOW MINIMUM READING** | |
| **Code** | ASME Sec VIII, Div 1 | | | **Concerns** | All Readings Acceptable | | | | | | **% Below Nom.** | 7.18 |
| **Material** | SA 106 - B | | | | | | | | | | **% Below C.A.** | 0.00 |
| **Stress** | 17100 psi | | | | | | | | | | **Below T-Min** | NO |
| **Efficiency** | 1 | | | | | | | | | | **Int. Corrosion** | NO |
| | | | | | | | | | | | **Int. Erosion** | NO |
| | | | | **Comments** | | | | | | | | |

| **Average** | **T-Min** | **CA** |
|---|---|---|
| 0.414 in | 0.128 in | 0.0625 in |

| | | | |
|---|---|---|---|
| **Short Term C.R.** | | | |
| **Long Term C.R.** | | | |
| **Remaining Life** | | | |
| **Assumed Nominal** | NO | | |
| **Assumed Material** | Yes | | |

| **TML** | **213-25** | | | | | | | | | | | |
|---|---|---|---|---|---|---|---|---|---|---|---|---|
| **Type** | Bottom | Head | **Date** | | **UT SURVEY READINGS (in)** | | | | | | **UT RESULT SUMMARY** | |
| **Shape** | Ellipsoidal | | Apr-21 | | 1 | 2 | 3 | 4 | 5 | 6 | **Nominal** | **Minimum** |
| **Side** | Shell | | | **Previous** | 0.424 | 0.424 | 0.447 | 0.449 | 0.415 | 0.483 | 0.378 in | **0.415 in** |
| **OD** | 6.625 in | | Apr-21 | **Current** | 0.424 | 0.424 | 0.447 | 0.449 | 0.415 | 0.483 | **UT ANALYSIS OF LOW MINIMUM READING** | |
| **Code** | ASME Sec VIII, Div 1 | | | **Concerns** | All Readings Acceptable | | | | | | **% Below Nom.** | 0.00 |
| **Material** | SA 234 - WPB | | | | | | | | | | **% Below C.A.** | 0.00 |
| **Stress** | 17100 psi | | | | | | | | | | **Below T-Min** | NO |
| **Efficiency** | 1 | | | | | | | | | | **Int. Corrosion** | NO |
| | | | | | | | | | | | **Int. Erosion** | NO |
| | | | | **Comments** | | | | | | | | |

| **Average** | **T-Min** | **CA** |
|---|---|---|
| 0.440 in | 0.128 in | 0.0625 in |

| | | | |
|---|---|---|---|
| **Short Term C.R.** | | | |
| **Long Term C.R.** | | | |
| **Remaining Life** | | | |
| **Assumed Nominal** | NO | | |
| **Assumed Material** | Yes | | |

| **TML** | **213-30** | | | | | | | | | | | |
|---|---|---|---|---|---|---|---|---|---|---|---|---|
| **Type** | Inlet | Nozzle | **Date** | | **UT SURVEY READINGS (in)** | | | | | | **UT RESULT SUMMARY** | |
| **Shape** | Cylindrical | | Apr-21 | | 1 | 2 | 3 | 4 | 5 | 6 | **Nominal** | **Minimum** |
| **Side** | Shell | | | **Previous** | 0.237 | 0.231 | 0.224 | 0.221 | 0.236 | 0.235 | 0.218 in | **0.221 in** |
| **OD** | 2.375 in | SCH XS | Apr-21 | **Current** | 0.237 | 0.231 | 0.224 | 0.221 | 0.236 | 0.235 | **UT ANALYSIS OF LOW MINIMUM READING** | |
| **Code** | ASME Sec VIII, Div 1 | | | **Concerns** | All Readings Acceptable | | | | | | **% Below Nom.** | 0.00 |
| **Material** | SA 106 - B | | | | | | | | | | **% Below C.A.** | 0.00 |
| **Stress** | 17100 psi | | | | | | | | | | **Below T-Min** | NO |
| **Efficiency** | 1 | | | | | | | | | | **Int. Corrosion** | NO |
| | | | | | | | | | | | **Int. Erosion** | NO |
| | | | | **Comments** | | | | | | | | |

| **Average** | **T-Min** | **CA** |
|---|---|---|
| 0.231 in | 0.043 in | 0.0625 in |

| | | | |
|---|---|---|---|
| **Short Term C.R.** | | | |
| **Long Term C.R.** | | | |
| **Remaining Life** | | | |
| **Assumed Nominal** | NO | | |
| **Assumed Material** | NO | | |

| **TML** | **213-35** | | | | | | | | | | | |
|---|---|---|---|---|---|---|---|---|---|---|---|---|
| **Type** | | Nozzle | **Date** | | **UT SURVEY READINGS (in)** | | | | | | **UT RESULT SUMMARY** | |
| **Shape** | Cylindrical | | Apr-21 | | 1 | 2 | 3 | 4 | 5 | 6 | **Nominal** | **Minimum** |
| **Side** | Shell | | | **Previous** | 0.223 | 0.225 | 0.220 | 0.220 | 0.236 | 0.229 | 0.218 in | **0.220 in** |
| **OD** | 2.375 in | SCH XS | Apr-21 | **Current** | 0.223 | 0.225 | 0.220 | 0.220 | 0.236 | 0.229 | **UT ANALYSIS OF LOW MINIMUM READING** | |
| **Code** | ASME Sec VIII, Div 1 | | | **Concerns** | All Readings Acceptable | | | | | | **% Below Nom.** | 0.00 |
| **Material** | SA 106 - B | | | | | | | | | | **% Below C.A.** | 0.00 |
| **Stress** | 17100 psi | | | | | | | | | | **Below T-Min** | NO |
| **Efficiency** | 1 | | | | | | | | | | **Int. Corrosion** | NO |
| | | | | | | | | | | | **Int. Erosion** | NO |
| | | | | **Comments** | | | | | | | | |

| **Average** | **T-Min** | **CA** |
|---|---|---|
| 0.226 in | 0.043 in | 0.0625 in |

| | | | |
|---|---|---|---|
| **Short Term C.R.** | | | |
| **Long Term C.R.** | | | |
| **Remaining Life** | | | |
| **Assumed Nominal** | NO | | |
| **Assumed Material** | NO | | |

HUNT INSPECTION LTD.

## STATIC DATA

| | | | | | |
|---|---|---|---|---|---|
| **Date:** | 04.07.2021 | **Vessel Name:** | Separator Bridle (Left) | **Regulatory#:** | - |
| **LSD:** | 00-00-000-00W0M | **Location:** | Blackfalds | **Serial:** | F-1091-001A |
| **Drawing#:** | 213 | **Job#:** | | **CRN#:** | OH5165.213 |

| **TML** | **213-40** | |
|---|---|---|
| **Type** | | Nozzle |
| **Shape** | Cylindrical | |
| **Side** | Shell | |
| **OD** | 2.375 in | SCH 160 |
| **Code** | ASME Sec VIII, Div 1 | |
| **Material** | SA 106 - B | |
| **Stress** | 17100 psi | |
| **Efficiency** | 1 | |

**UT SURVEY READINGS (in)**

| | **Date** | 1 | 2 | 3 | 4 | 5 | 6 |
|---|---|---|---|---|---|---|---|
| **Previous** | Apr-21 | 0.340 | 0.340 | 0.346 | 0.348 | 0.341 | 0.342 |
| **Current** | Apr-21 | 0.340 | 0.340 | 0.346 | 0.348 | 0.341 | 0.342 |

**Concerns** All Readings Acceptable

**Comments**

**UT RESULT SUMMARY**

| **Nominal** | **Minimum** | **Average** | **T-Min** | **CA** |
|---|---|---|---|---|
| 0.343 in | **0.340 in** | 0.343 in | 0.038 in | 0.0625 in |

**UT ANALYSIS OF LOW MINIMUM READING**

| | | | |
|---|---|---|---|
| **% Below Nom.** | 0.87 | **Short Term C.R.** | |
| **% Below C.A.** | 0.00 | **Long Term C.R.** | |
| **Below T-Min** | NO | **Remaining Life** | |
| **Int. Corrosion** | NO | **Assumed Nominal** | NO |
| **Int. Erosion** | NO | **Assumed Material** | NO |