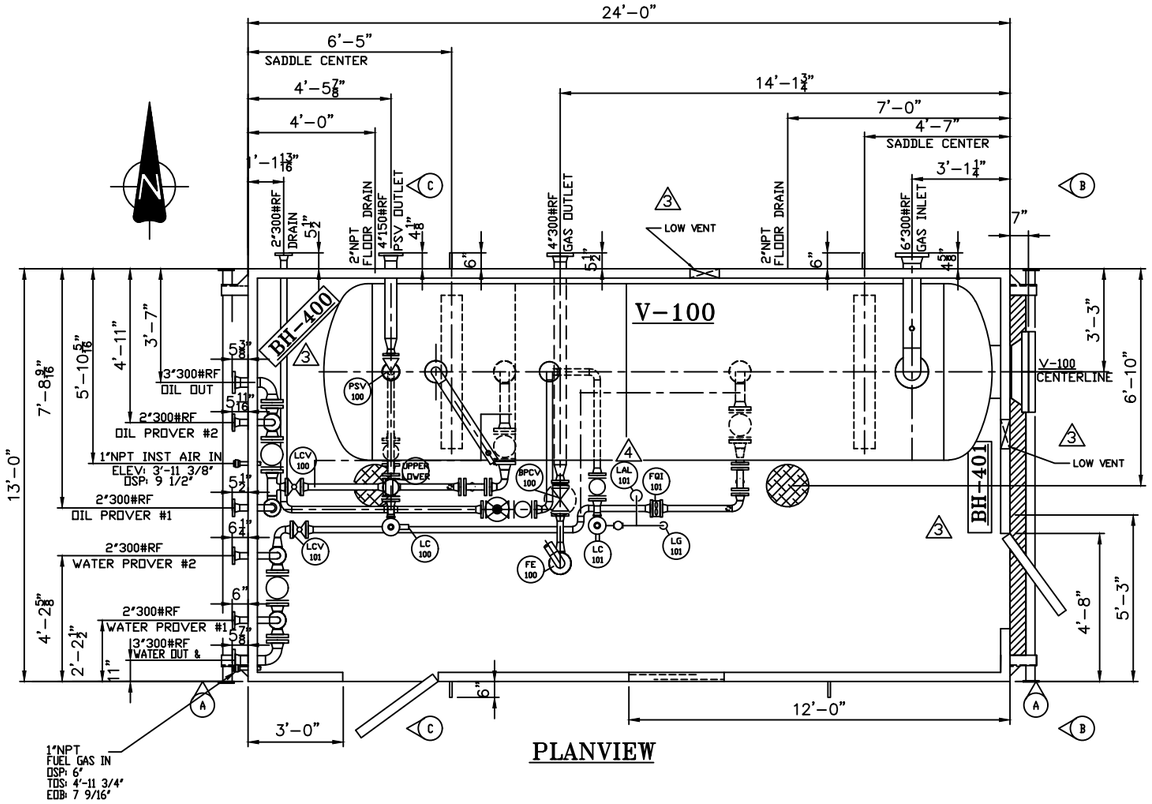

PLANVIEW

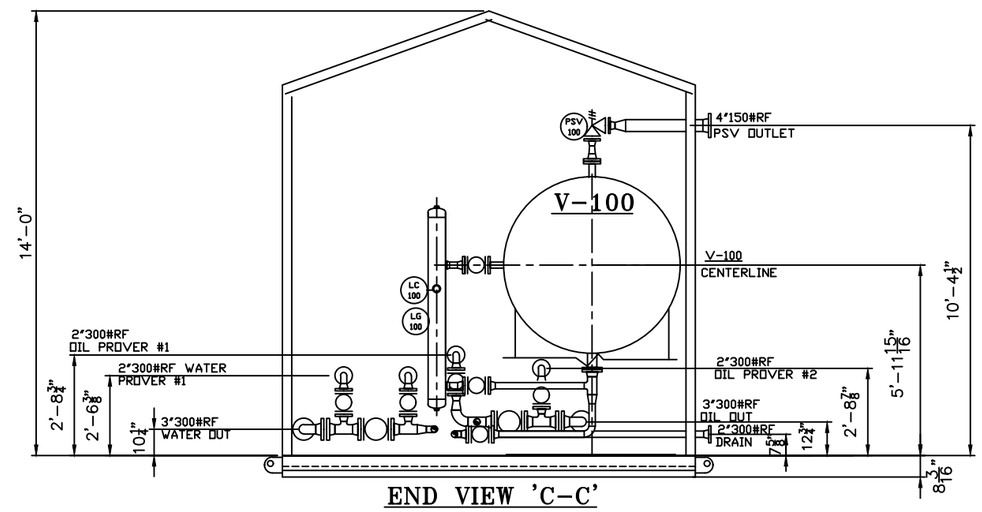

END VIEW 'C-C'

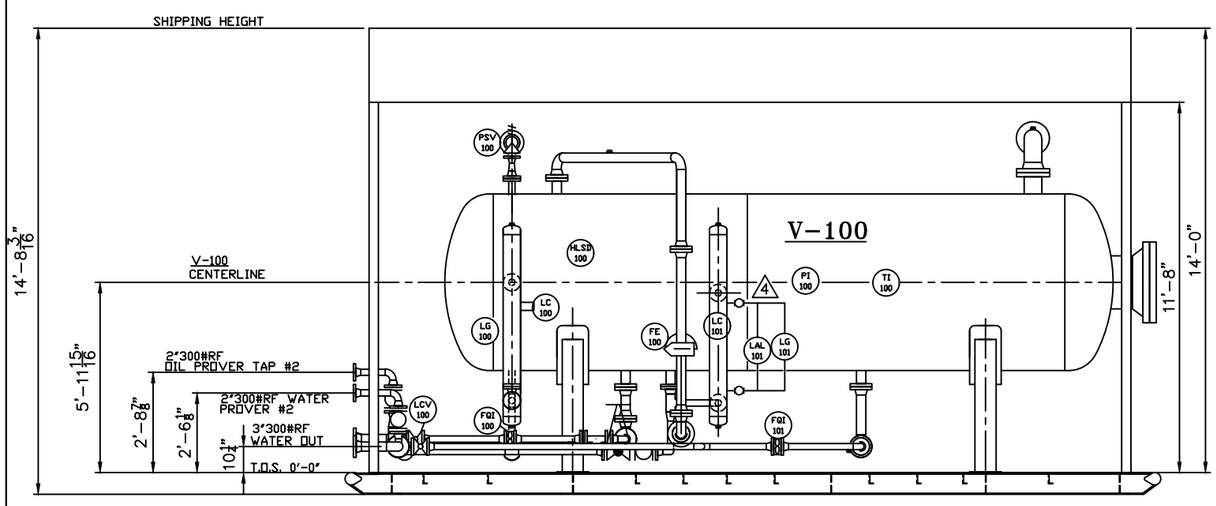

ELEVATION VIEW 'A-A'

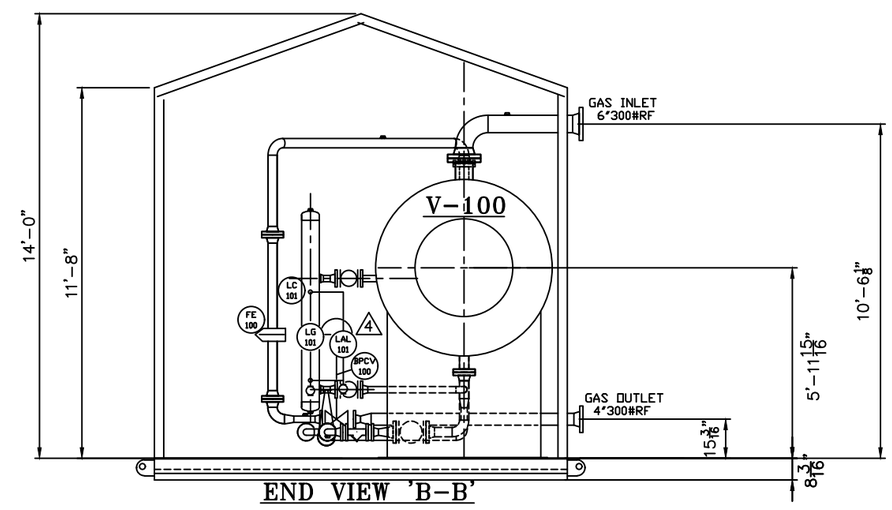

END VIEW 'B-B'

STAMPS & PERMITS

OFFICE MNGR:_____DATE:_____
ISSUED TO FAB MNGR:_____DATE:_____

REV.	DESCRIPTION	DATE	DRAWN	CHK'D	APPR.
4	FINAL AS BUILT - REV. AS PER CUSTOMER	02-10-28	PP		
3	REV. AS PER CUSTOMER	02-07-17	PP		
2	AS BUILT	02-07-12	PP		
1	REV AS PER CUSTOMER CUSTOMER CHANGES	02-05-22	SG		
0	ISSUED FOR CONSTRUCTION	02-05-10	BB		
B	REV AS PER CUSTOMER - MANWAY FLANGE	02-05-07	PP		
A	ISSUED FOR APPROVAL	02-04-25	CP		

DELANEY ENERGY MANUFACTURING LTD.
HALKIRK ALBERTA

DATE 02-04-25	CONOCO CANADA RESOURCES LTD. c/o VECO ALLIANCE GROUP
DESIGNED BY DELANEY	
DRAWN BY C.PRICHARD	HORIZONTAL INLET SEPARATOR -3 PHASE c/w 13'-0" x 24'-0" LONG BUILDING FOR 64"ID x 18'-0" S/S HORIZONTAL SEP.
CHECKED BY	
APPROVED BY	PROJECT NO. 1300-001 / FILENAME 1091-001GA / REFERENCE NO.
SCALE	SHEET NO. 1 OF 1 / DRAWING NO. CCL-1091-001L / REV. NO. 4