EASTERN AIR PRODUCTS LLC.

Northwest Equipment Ltd.

HEATLESS AIR DRYER

OIL FIELD CONSTRUCTION

OPERATIONS AND INSTRUCTIONS MANUAL

MODELS NW15 TO NW250

FORM: NW1103-01

415 East Lake Road
Airdrie, AB T4A 2J7
Tel. (403)945-1988
Fax (403)945-1910

To Our Valued Customer,

We would like to thank and congratulate you on your selection of the Northwest Equipment NW Dryer. The NW represents the most reliable solution for your air drying needs. The design of the NW is easily understood and system set up, operation and maintenance are a snap. With fewer moving and more robust components than comparative units, your Gemini is designed to provide you with years of trouble free operation.

Should you at any time have any questions regarding the operation or usage of your Northwest NW, please contact Northwest Equipment or your area distributor:

Thank you for choosing **Northwest Equipment**.

Northwest Equipment Ltd.

www.nwequipltd.com

TABLE OF CONTENTS

Section 1.0 — **Warnings and Precautions**

Never operate a unit you are not familiar with

Section 2.0 — **Getting to Know Your Dryer**

Understanding your components

Section 3.0 — **Getting Started – Installation**

Proper installation is critical to operating reliability

Section 4.0 — **Let's Start the Dryer**

Start-up is easy. Just follow these simple instructions.

Section 5.0 — **Sequence of Operation**

How does it work?

Section 6.0 — **Let's Shutdown the Dryer**

Good idea. Time for maintenance.

Section 7.0 — **It's Time for Dryer Maintenance**

Easy service to keep up on.

Section 8.0 — **Troubleshooting**

Section 9.0 — **Timing Charts**

Section 10.0 — **Specification Chart**

Section 11.0 — **Correction Factors**

Section 12.0 — **Drawings and Parts Lists**

Section 13.0 — **Warranty**

Appendix: CD-Rom Including: Manual in print, Unit drawing set, Air system layout and design recommendations
See Insert – Quick Start Guide

415 East Lake Road
Airdrie, AB T4A 2J7
Tel. (403)945-1988
Fax (403)945-1910

SECTION 1.0 – WARNINGS AND PRECAUTIONS

WARNING

- Never service dryer or associated equipment while under pressure.
- Always disconnect power before servicing dryer.
- Always use eye and ear protection when working on or near dryer. Dryer exhaust ports can raise particles especially when a unit is being operated without mufflers.
- Be advised that noise level out of exhaust ports is higher during initial blowdown or depressurization of dryer towers.
- Automatic drain valve on coalescing pre-filter will eject water, oil, particles, and air under pressure when open.

CAUTION

- Condensate drainage from coalescing pre-filter on air dryer may contain oil or other contaminants. Be sure to follow all local regulations for proper handling and disposal.
- Component failure from a lack of maintenance can result in a large air loss and/or high pressure loss across dryer. In the event of this occurring, bypass air around dryer to restore flow and pressure. NOTE: Recommended maintenance schedule should be followed to minimize the chances of this occurring. For recommended maintenance on dryer, please refer to **Section 7.0** Dryer Maintenance.
- Dust from Activated Alumina desiccant is considered a nuisance dust. Proper precautions should be taken when handling desiccant.
- For proper disposal of desiccant, please refer to MSDS. Also be sure to comply with any local codes and regulations. Note that desiccant contaminated with oil or other foreign substances may require that you follow disposal requirements for that particular contaminant.

WARNING

1. **NEVER** work on system while its under Pressure.
2. Disconnect power and tag out prior to performing service.
3. **DO NOT USE** for breathing air.

CAUTION

1. Use **TWO WRENCHES** when installing piping.
2. **DO NOT** cycle with air compressor.
3. Read and follow all instructions before operating the unit.

Failure to follow instructions may result in severe injury or death

SECTION 2.0 – GET TO KNOW YOUR NW

Each NW Heatless dryer shares a common design platform. All Dryers are provided with inlet pre-filter and drain to separate gross contaminants in the air or gas coming to the unit.

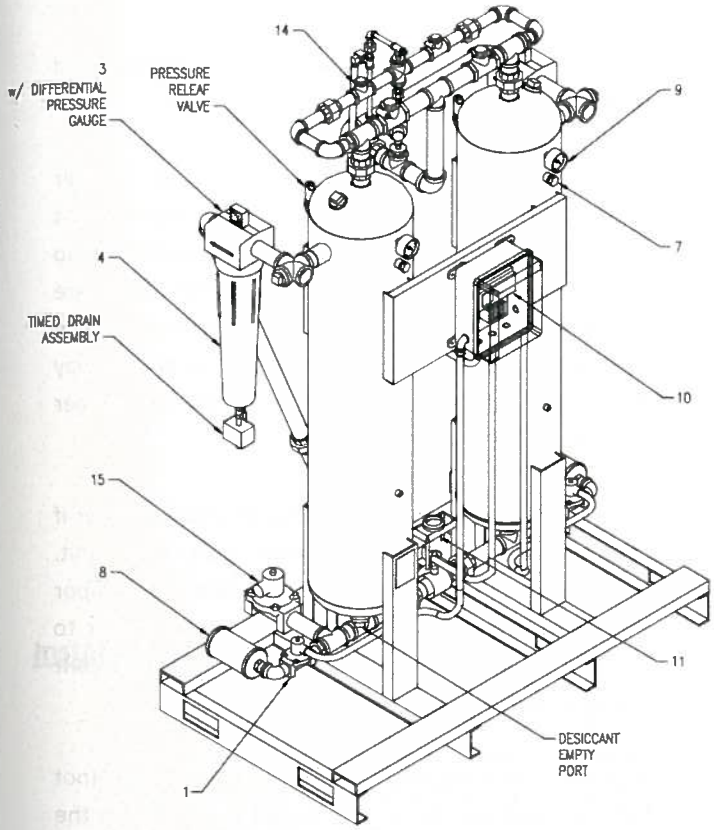

The air or gas is then dehydrated to the specified dew point in the drying towers through pressure swing adsorption and regeneration.

A final polishing filter is installed to remove any particle matter prior to entering your piping system.

Understanding the key components to your dryer and performing maintenance at reasonable intervals will assure a long reliable life.

This chart and drawing will help you to identify the common components for your Gemini model. It can also be used when calling for support to identify items quickly.

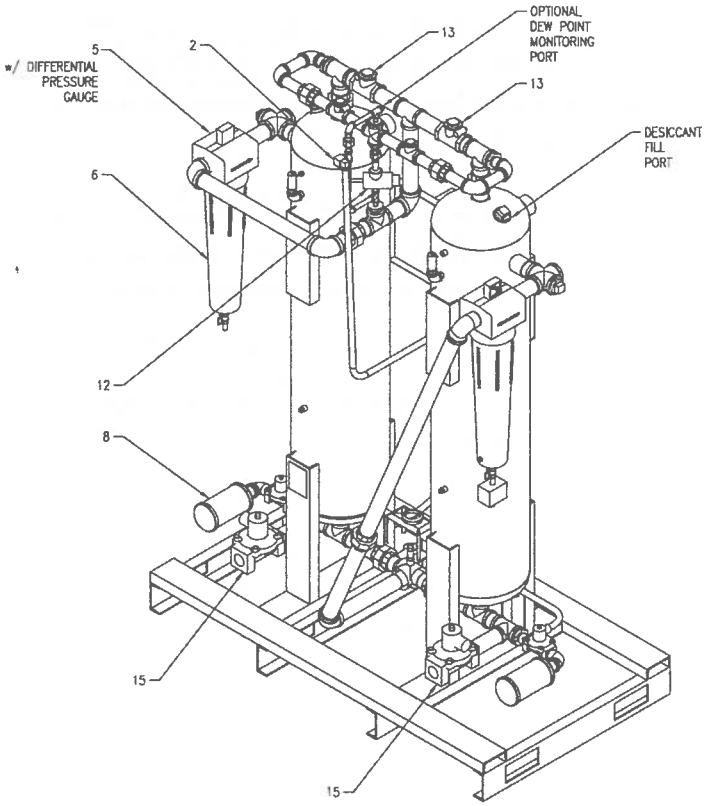

Chart 1 – Basic Dryer Parts

ITEM	QUANTITY USED	DESCRIPTION
1	2	Valve, Pre-exhaust
2	1	Valve, Repressurization
3	2	Filter and Indicator
4	2	Filter Element
5	2	Dew Point Indicator
6	2	Filter Bowl, pre-filter drain
7	2	Moisture Indicator
8	1	Exhaust Muffler
9	1	Pressure Gauge
10	1	PLC Controller
11	1	Inlet Valve
12	1	Regulator, Purge
13	2	Outlet Check Valve
14	2	Purge Line Check Valve
15	2	Main Exhaust Valve

415 East Lake Road
Airdrie, AB T4A 2J7
Tel. (403)945-1988
Fax (403)945-1910

SECTION 3.0 – GETTING STARTED- INSTALLATION

Inspect shipping crate for any damage. If any damage is found notify freight carrier immediately so freight claim can be filed.

1. If no external damage to shipping crate is found remove crate from dryer.

2. Inspect dryer for any concealed damage. If any concealed damage is found, notify freight carrier immediately so freight claim can be filed.

3. Be sure to install dryer in an area where it can easily be accessed for maintenance. With this in mind, we recommend a minimum of 30" on all sides of dryer. Note that clearance requirements may vary depending on model. Refer to the applicable general arrangement print or contact the factory if clearance requirement for your dryer is needed.

4. Dryer should be installed in a clean, well lit area on a level surface where vibration is not present.

5. Standard dryers should be installed in an environment with an ambient temperature range of 40*F to 130*F. Please contact the factory regarding applications that run outside this range.

6. Check all piping and electrical connections to ensure nothing came loose during shipment. Loose piping or electrical connections can lead to improper operation of dryer.

7. Connect dryer to air system. Refer to installation drawing in **Section 12.0** for dryer air in/out connection points. For ease of installation, air outlet can be connected at 2 different points. Refer to installation drawing for location of these connections. Be sure that all piping used is supported properly and is at least the same size as the dryer inlet and outlet connections.

8. Install isolation valves at dryer inlet and outlet.

9. Install bypass around dryer if one was not provided with your unit.

10. Exhaust ports on dryer can be piped to another location if desired. If you decide to pipe your exhaust ports to another location, you must ensure that no backpressure is in either tower while they are regenerating. Please upsize your exhaust piping accordingly. Exhaust ports should also be piped away individually. Please contact the factory for proper requirements for your application.

11. Ensure coalescing pre-filter is installed prior to dryer if filter package was not included with your unit. Desiccant dryers are designed to remove water vapor ONLY. Failure to install proper pre-filtration prior to the dryer will result in premature failure of desiccant charge as well as improper operation of dryer.

12. If you are installing your own coalescing pre-filter (not factory mounted), be sure to install it as close to the dryer as possible.

13. Note that if there is not a factory mounted after filter on your dryer, desiccant dust will travel downstream of dryer which can result in excessive wear or damage to downstream equipment. If this applies to the application you are running your dryer in, please install a particulate after filter before starting dryer.

14. Make electrical connection to dryer. Refer to dryer's electrical schematic for location of connection points. Note that you are responsible for providing short circuit protection for the dryer.

15. Read and understand entire operator's manual before proceeding with start-up of equipment.

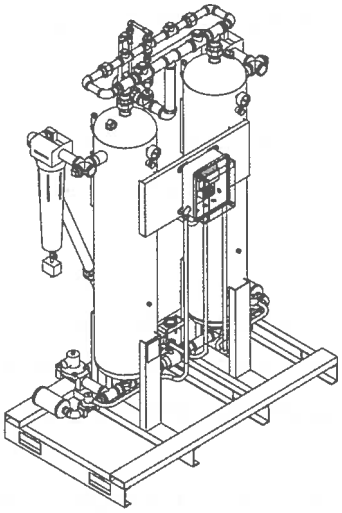

Installation Notes:

- Ensure all drainage upstream of dryer is working properly before commissioning dryer. A desiccant dryer is designed to remove water vapor only. Oil and/or liquid entering the dryer will result in premature failure of desiccant as well as poor dew point performance.

- All units are provided factory charged with desiccant. No field desiccant charging is required. Only use Eastern Air Approved desiccant.

- The location of an air receiver in an air system will depend on the application that the dryer is installed in. If you are uncertain if a dryer should be installed before or after an air receiver, please contact the factory for recommendations for your system.

  - **All drains installed upstream of dryer, including factory mounted coalescing pre-filter should be auto or zero-air-loss type drains. Manual drains are not recommended.**

415 East Lake Road
Airdrie, AB T4A 2J7
Tel. (403)945-1988
Fax (403)945-1910

SECTION 4.0 – START UP

You now have your dryer installed and are ready to go. Here are is a quick checklist to review before you get started:

- Read and understand entire manual. Feel free to contact Northwest Equipment if you are unsure of anything in the manual. We will be happy to assist you with whatever you need to make sure you are comfortable with the unit before starting it. ☐

- Make sure there is not any air flow running through dryer. If there is, be sure to close air isolation valves or open air bypass around dryer before commencing with start-up. Check pressure gauges for "0" PSIG Reading. ☐

- Even though we want no air pressure on the dryer at this point, you do want to make sure that your air compressor is in service and your air system is pressurized, ready to feed the unit when we (you) hit the next step. ☐

Thanks for taking the time to review your pre start-up checklist. If you have checked off all of the above, you are now ready ... Let's start your Northwest Equipment NW Series Heatless Dryer! Here is a step-by-step procedure to follow. By the end you will begin to experience the benefits of the dry air that you paid for by purchasing our product.

STEPS:

1. As you did prior to installation, inspect the unit to ensure that there is no damage that happened during shipment or installation. If you do see any damage, please contact EAP immediately with a description of what was found.

2. Remove the mufflers from dryer exhaust valves.

3. Apply power to dryer. Be sure to review the wiring diagram for your unit. Make sure proper short circuit protection is provided and all applicable electrical codes are followed.

115V/1/60 grounded power cord

4. Turn On/Off switch to **"On"** position
   a. Switch will illuminate in Green.
   b. Verify that the **Logic Pro Control** screen becomes illuminated and a message center appears.
   c. Verify Readings:

- **When the unit is initially powered up it will be in a "null" state**

Display should read →

10 Minute Cycle
Running
Drying Left
Regen Right

**NOTE: Drying and regenerating may be opposite.*

5. To put the unit into a run mode you will need to select the dryer mode.

6.

a. To select dryer mode:

i. **Press Desired Arrow Key (See Diagram on Next Page)** to select appropriate cycle (use 10 minute for initial start up, but you can also select the 5 minute short cycle if desired)
ii. **Press the Run Key**
iii. **Allow unit to run half cycle PRIOR to introducing air flow.** Unit should always be pressurized in DRYING RIGHT state.

415 East Lake Road
Airdrie, AB T4A 2J7
Tel. (403)945-1988
Fax (403)945-1910

Northwest Equipment Ltd.

HEATLESS AIR DRYER

POWER

LOGIC PRO CONTROL

NW Series Instrument Air Dryer

Start dryer without air flow
Turn power "**ON**" (Null screen will appear)
Press desired cycle arrow key
Verify display "__ **MINUTE CYCLE**"
Press "**RUN**" key
Allow unit to operate half cycle
Slowly open bypass to allow air flow
Always pressurize dryer on "**DRYING RIGHT**" cycle

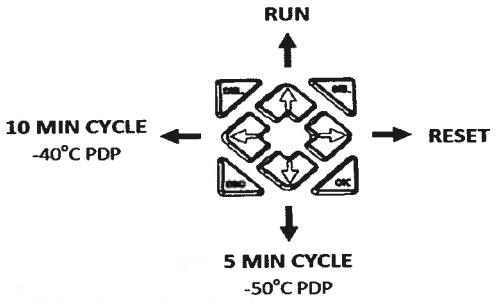

EASTERN AIR PRODUCTS LLC.

7. Slowly pressurize dryer by closing air bypass, opening isolation valves (or both).
8. Check purge gauge to ensure proper setting (Purge is preset at the factory, so you should only need to verify this). Be sure to check purge while one tower is drying and the other is regenerating. Note that you will see close to line pressure on purge gauge while unit is in repressurization step.

Self Adjusting Purge Control

The proper purge setting can be found on the "dog tag" hanging around the purge regulator on your machine.

9. Verify that tower pressure gauges are reading close to line pressure while drying and at zero pressure when regenerating.

10. Allow unit to run 4 complete cycles without mufflers installed on exhaust valves.

11. Reinstall mufflers on exhaust valves

Go have a cup of coffee or a beverage of your choice because you're done!!!! Wasn't that easy?

415 East Lake Road
Airdrie, AB T4A 2J7
Tel. (403)945-1988
Fax (403)945-1910

SECTION 5.0 – SEQUENCE OF OPERATION

You've started your dryer and it's now online and running. Here is how it works:

Your dryer is PLC controlled. The dryer PLC is the brain of the system and controls:

- The 3-way inlet valve which allows air flow to the online or drying tower.
- The exhaust solenoids which open on the regenerating side tower to allow the purge air to leave the machine.
- The Repressurization solenoid which opens during the repressurization step to bring the newly regenerated tower up to full pressure before switchover.

LC Controller

The dryer's PLC will also allow you to select 1 of 2 operating cycles to best suit your needs. They are:

- 10 minute standard cycle (recommended for daily operation)
- 5 minute short cycle (to recover after a dryer failure or to achieve a lower pressure dew point of -50*C)

To change your dryer cycle see 4.1 & 4.2

There are also 4 check valves in the upper line set of the dryer (2 purge & 2 outlet) which distribute air properly out to your process & through the purge circuit for the air needed to regenerate the off line tower.

Here is the sequence your dryer will follow once it is in the run mode:

Step 1; Left Tower Drying, Right Tower Regenerating

An output from Q1 on the PLC will move the 3-way inlet valve to allow the wet air flow through the left tower of the dryer. The air will be dried as it passes through the left side drying tower. The air will exit the left side drying tower and flow through the left outlet check valve & through the dryer after filter. During this time, the left tower pressure gauge should read line pressure (approximately 100 psig).

At the same time, an output from Q5 on the PLC will energize and open the right tower exhaust solenoid allowing the regenerating right side tower to first depressurize, then to allow the purge air to flow from the dryer outlet, through the purge regulator & purge orifice, then through the right side purge check valve. The purge flow will strip the moisture off of the desiccant bed and exit through the open exhaust solenoid and out of the muffler. During this time, the right tower pressure gauge should read 0 psig.

Step 2; Left Tower Drying, Right Tower Repressurizing

During this step, the dryer will continue to dry on the left side so an output from the PLC on Q1 will remain to keep the 3-way inlet valve in the same position. During this time the left tower pressure gauge should continue to read line pressure (approximately 100 psig).

The output from Q5 on the PLC however will no longer be present, which will close the right tower exhaust solenoid.

At the same time an output from Q7 on the PLC will energize the repressurization solenoid which will allow additional air flow from the purge line to the right tower. You should see the right side tower begin to pressurize and come to full line pressure (approximately 100 psig) at the completion of this step.

The purge gauge will read line pressure (approximately 100 psig) during this step.

Step 3; Right Tower Drying, Left Tower Regenerating

An output from Q4 on the PLC will move the 3-way inlet valve to allow the wet air flow through the right tower of the dryer. The air will be dried as it passes through the right side drying tower. The air will exit the right side drying tower and flow through the left outlet check valve & through the dryer after filter. During this time, the right tower pressure gauge should read line pressure (approximately 100 psig).

415 East Lake Road
Airdrie, AB T4A 2J7
Tel. (403)945-1988
Fax (403)945-1910

At the same time, an output from Q2 on the PLC will energize and open the left tower exhaust solenoid allowing the regenerating left side tower to first depressurize, then to allow the purge air to flow from the dryer outlet, through the purge regulator & purge orifice, then through the left side purge check valve. The purge flow will strip the moisture off of the desiccant bed and exit through the open exhaust solenoid and out of the muffler. During this time, the left tower pressure gauge should read 0 psig.

Step 2; Right Tower Drying, Left Tower Repressurizing

During this step, the dryer will continue to dry on the right side so an output from the PLC on Q4 will remain to keep the 3-way inlet valve in the same position. During this time the right tower pressure gauge should continue to read line pressure (approximately 100 psig)

The output from Q2 on the PLC however will no longer be present, which will close the left tower exhaust solenoid.

At the same time an output from Q7 on the PLC will energize the repressurization solenoid which will allow additional air flow from the purge line to the left tower. You should see the left side tower begin to pressurize and come to full line pressure (approximately 100 psig) at the completion of this step.

The purge gauge will be reading line pressure (approximately 100 psig) during this step.

GENERAL NOTE: You will notice that the NW Series Dryer's timing is "staged". This staged timing eliminates valve differentials during normal operations of the unit to reduce fatigue. The user should expect that the Timing Charts and above Sequence of Operation do not note this staging.

SECTION 6.0 – SHUT DOWN

It's time for dryer maintenance!! Here is a quick step-by-step procedure to shut your dryer down properly.

When shutting the dryer down, always be sure to bypass the unit prior to commencing with shut down. Failure to bypass unit and/or attempting to work on a unit under pressure may result in severe injury or death.

WARNING

PRESSURE GAUGES SHOULD READ "0" PSIG BEFORE COMMENCING

1. Open bypass valve(s) slowly to allow air flow to bypass dryer.

2. Close inlet and outlet isolation valves (usually installed independently of dryer in piping system) to dryer to remove air flow, or shut down air compressor.

3. **Verify that the pressure vessels are reading 0 PSIG. You can relieve pressure through the drain system.**

4. Turn dryer "OFF"

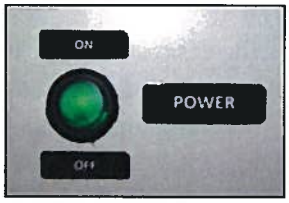

5. Remove power from supplied 115v/1/60 electrical plug.

6. Commence Maintenance (Dryer maintenance can be found in SECTION 7.0).

415 East Lake Road
Airdrie, AB T4A 2J7
Tel. (403)945-1988
Fax (403)945-1910

SECTION 7.0 – DRYER MAINTENANCE

You probably have noticed already that your Northwest Equipment NW Series heatless dryer has very few moving parts. There are, however, a few items that you will need to maintain to ensure your dryer is operating at its best. Please be sure to follow this schedule regularly and you will have a reliable piece of equipment you can count on for many years to come. Here is the recommended maintenance schedule for your dryer:

NW SERIES DRYER MAINTENANCE				
	Weekly	Monthly	Semi-Annual	Annual
Check Moisture Indicator	X	X	X	X
Verify Purge Setting	X	X	X	x
Check Auto Drain	X	X	X	X
Verify No Back Pressure In Regen. Tower	X	X	X	X
Check Filter DP Gauges	X	X		
Replace Pre & After Filter Elements			X	X
Clean Auto Drain Solenoid on Pre Filter			X	X
Replace Moisture Indicator				X
Replace Exhaust Mufflers				X
Remove 1 cup Desiccant Sample from Each Tower (Contact EAP for RMA number to return samples)				X

Desiccant Replacement

The desiccant charge in your unit will need to be replaced, on average, every 3-5 years. Some units may require replacement of the desiccant charge more frequently. Be sure to return desiccant samples for testing annually to confirm the condition of your desiccant charge. To replace your desiccant charge:

- Bypass air flow around dryer.
- Remove power from dryer.
- Depressurize dryer by pressing drain test button. Repeat until there is no pressure remaining on any gauge on unit.
- Remove desiccant drain plug from bottom of each tower. Be sure to have adequately sized container(s) to put desiccant into for disposal.
- Reinstall desiccant drain plugs on each tower.
- Remove desiccant fill plug on top of each tower.
- Charge each tower with correct charge of Eastern Air Products activated alumina.
- Reinstall desiccant fill plugs on each tower.
- Slowly repressurize dryer.
- Reapply power to dryer.

NOTES:

Be sure to use Northwest Equipment desiccant. Failure to do so may result in a voided warranty and/or a reduction in performance of your unit. Eastern Air provides only USA manufactured low abrasion desiccants.

Consult Northwest Equipment for desiccant MSDS for proper disposal instructions. Also be sure to follow all local regulations for disposal of desiccant. Note that desiccant contaminated with other may require that the disposal requirement for that particular contaminant be followed.

415 East Lake Road
Airdrie, AB T4A 2J7
Tel. (403)945-1988
Fax (403)945-1910

NW SERIES TROUBLESHOOTING GUIDE		
Power to 3-way Inlet Valve But It's Not Responding	1. Verify Correct Voltage has been applied to unit	Move Dryer to Different Power Source
	2. Check Dryer Wiring Schematic to Make Sure Wiring is Correct	Correct Wiring
3-way Inlet Valve Actuator Humming	1. Ensure proper voltage to valve & make sure all connections are tight	Move Dryer to Different Power Source and/or tighten connections
	2. Make sure dryer is properly grounded	Ground unit properly
Actuator on 3-way Inlet Valve Perfoms Erratically	1. Check to see actuator is not stalling. Remove actuator from valve to verify freeness of valve operation	If Valve turns freely, replace valve, if not, replace actuator
	2. Make sure unit is not operating in an excessive ambient temperature (over 120*F). The actuator motor is equipped with a thermal protector which will shut power off to the motor if it overheats. If tripped, just turn unit off and thermal protector will reset automatically once it cools.	Move dryer to different location or provide better ventilation to lower ambient temperature
Exhaust Solenoid on Drying Tower leaking Air	1. Valve is Dirty	Clean Valve
	2. Defective Diapgragm or O-Rings	Replace Valve
	3. Verify no voltage from PLC	If voltage, reprogram or replace PLC
High Pressure Drop Across Unit	1. Clogged Pre or After Filter Element	Replace Pre or After Filter
	4. Inlet Valve or Check Valve Leak	See Backpressure In Regenerating Tower
Back Pressure In Regenerating Tower	1. Clogged Muffler	Replace Mufflers (note if 1 is clogged replace both.
	2. Outlet Check Valve on Regenerating Side Leaking	Replace Check Valve
	3. Purge Check Valve on Drying Side Leaking	Replace Check Valve
	4. 3-way Inlet Valve not Operating Properly	See 3-way Inlet Valve Troubleshooting Above

Logic Pro Control Timing Sequence by Cycle:

When operating your Northwest NW, the board will output signals control dryer valving. The below chart may be used as a reference to timing of system valves and testing for control logic proper functioning. Be sure to CYCLE RESET your Locig Pro Controller whenever changing Cycle Operating Mode.

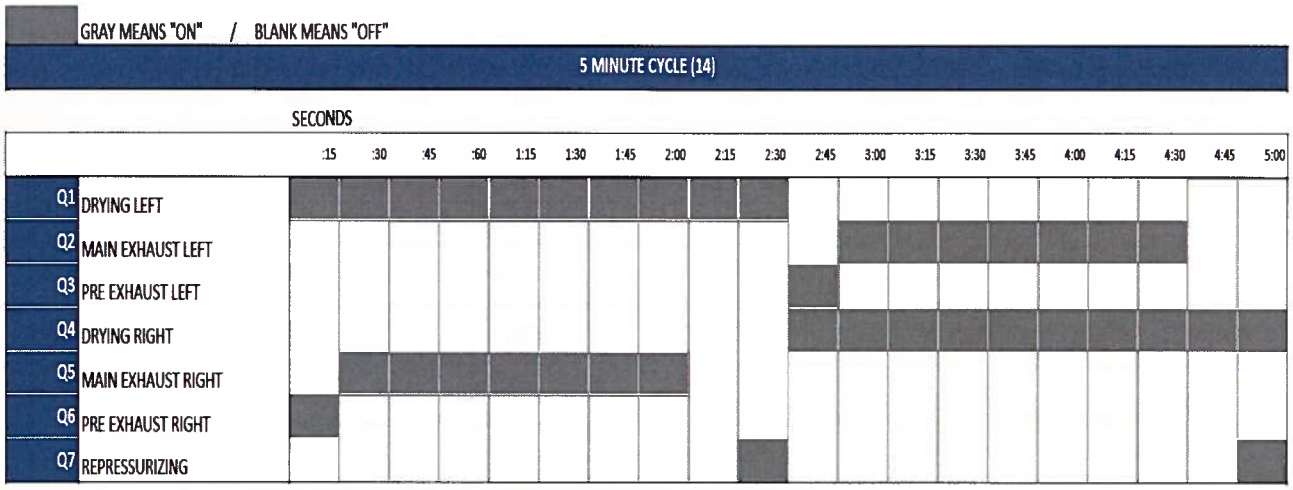

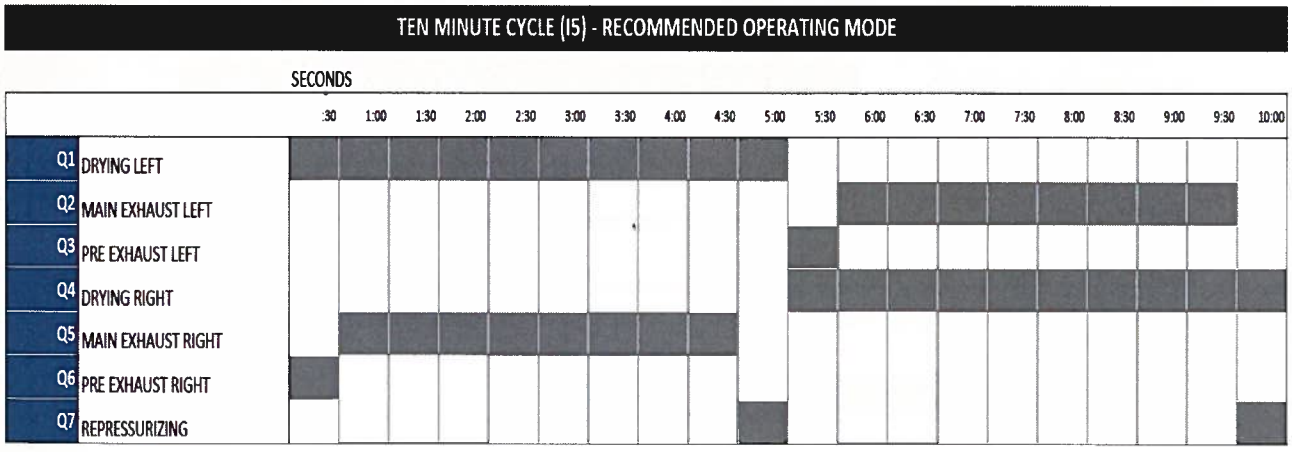

Please consult the factory prior to engaging in repair without proper understanding of the unit or its operation. Only trained technicians should work on the dryer. For phone support, call Northwest Equipment at 403-945-1988 to talk to one of our technicians.

Timing Chart for NW Manual 1101.NW Revision 1

415 East Lake Road
Airdrie, AB T4A 2J7
Tel. (403)945-1988
Fax (403)945-1910

NW SERIES DRYERS - UNIT SPECIFICATIONS

MODEL	FLOW (SCFM) @100 PSIG	DESIGN INLET °F (°C)	Air Inlet/Outlet	Purge Rate (SCFM) @ 100 PSIG	Orifice Size	Purge Pressure Setting	Desiccant Per Tower (lbs.)	Standard Voltage	Fuse (amps)
NW-15	15	100 (38)	3/8"	2.25	na	Tag	7	115V/1/60	3
NW-25	25	100 (38)	3/8"	3.75	3/32"	27	10	115V/1/60	3
NW-40	55	100 (38)	1/2"	7.5	1/8"	40	22	115V/1/60	3
NW-75	75	100 (38)	3/4"	11.25	1/8"	53	32	115V/1/60	3
NW-100	100	100 (38)	1"	15	3/16"	32	46	115V/1/60	3
NW-125	130	100 (38)	1"	19.5	3/16"	41	50	115V/1/60	3
NW-200	200	100 (38)	1 1/2"	30	1/4"	44	100	115V/1/60	3
NW-250	300	100 (38)	1 1/2"	45	5/16"	31	118	115V/1/60	3

Consult Factory for larger models

Dryer Specification Data:

Customer Name _____

Purchase Date _____

Dryer Serial No. _____

Tank National Board No's _____ & _____

CRN No (where applicable) _____

Inlet Pressure _____ (min.) _____(max.)

Inlet Temperature _____ (std.) _____(max.)

Options/Notes: _____

_____

_____

SECTION 11.0 – CORRECTION FACTORS

NW Series Dryers are designed to provide a -40 degree F/C pressure dew point based on inlet conditions as defined by the Compressed Air and Gas Institute ADF100 Standard of 100 degree F Inlet Air Temperature, 100 PSIG Inlet Air Pressure and rated unit flow. To determine rated unit flow for pressures other than 100 PSIG consult the chart below. Never operate a unit below 60 PSIG without first consulting the factory.

MODEL	Inlet Pressure				
	60	80	100	120	140
NW-15	10	13	15	19	22
NW-25	16	22	25	32	36
NW-40	27	36	40	56	63
NW-75	49	66	75	95	108
NW-100	65	88	100	126	144
NW-125	85	114	125	158	180
NW-200	130	176	200	252	288
NW-250	167	220	250	315	360

	Degrees F		
	80	100	120
Factor	1.18	1	0.85

For applications where inlet temperature is not 100 degrees F, use the below chart to apply a correction factor to determine net capable flow:

	Degrees F		
	80	100	120
Factor	1.18	1	0.85

Example: Model NW-100 operating at 120 PSIG and 120 F Inlet Temperature

Rerate for pressure = 126 SCFM X 0.85 (correction factor for temperature) = 107

New Rated Flow = 107 SCFM

415 East Lake Road
Airdrie, AB T4A 2J7
Tel. (403)945-1988
Fax (403)945-1910

SECTION 12.0 – DRAWINGS AND PARTS LISTS

Select your product from the below matrix to identify the parts list and drawing set that matches your dryer. The specific drawing and parts list for your dryer is contained on the CD-Rom that was provided with your unit. Contact Northwest Equipment, or your local Dealer to obtain support for your unit.

MODEL	Drawing No.			
	General Arrangement Print	Electrical Schematic	Flow Schematic	Parts List
NW-15	EA200-45	EA400-21	EA500-04	SPL-NW-15
NW-25				SPL-NW-25
NW-40				SPL-NW-40
NW-75				SPL-NW-75
NW-100				SPL-NW-100
NW-125				SPL-NW-125
NW-200				SPL-NW-200
NW-250				SPL-NW-250

Typical Spare Parts List:

			Unit Quantity	Recommended Interval			
Item No.	Description	Partr Number		6 Month	Annual	3-5 years	On Hand
1	Element, Prefilter	XXX	1	X			X
2	Element, After Filter	XXX	1		X		X
3	Muffler, Exhaust	XXX	2		X		X
4	Desiccant, Alumina	XXX	XXX			X	
5	Valve, Inlet	XXX	1			X	
6	Valve, Inlet Actuator	XXX	1				
7	Valve, Exhaust	XXX	2				
8	Valve, Purge Regulator	XXX	1				
9	Valve, Purge Check	XXX	2				
10	Valve, Outlet Check	XXX	2				
11	Repair Kit, Purge Check	XXX	2			X	
12	Repair Kit, Outlet Check	XXX	2			X	
13	Controller, PLC	XXX	1				
14	Moisture Indicator	XXX	2				X
15	Fuse, 3 Amp	XXX	1				X
OPTIONS:		XXX					
15	Probe, Dew Point Sensor	XXX	1				
16	Valve, Bypass	XXX	3				

SECTION 13.0 – WARRANTY

Your Northwest Equipment NW series heatless dryer will carry a warranty on any defect in material and workmanship on the dryer for a period of 2 years from the date of shipment. The first year of coverage will cover both replacement parts and labor time to install per our warranty rate schedule. First year warranty may be extended to 18 months from date of shipment where installation is delayed. Consult factory to verify extended warranty coverage. The second year of coverage (or remaining period of 24 months from date of shipment) will cover replacement parts only with labor time NOT being covered.

Northwest Equipment will not assume responsibility for any contingent liability caused by the alleged failure of any of our product or accessories.

The above warranty will also NOT cover any failure resulting from improper installation of the dryer. So be sure to review the Getting Started section of your manual before starting your dryer. Improper installation can lead to pre mature failure of then dryers' desiccant and other components, caused by among other things, liquid slugging, excessive vibration, or excessive desiccant dusting.

In the event you do have a situation arise where you will need to utilize your dryer warranty, here is the procedure you will need to follow:

PROCEDURES FOR MAKING A WARRANTY CALL:

1. Record the model and serial number of your dryer along with a description of the problem you are having.
2. Contact Eastern Air Products to advise us of the problem you are having. We will request the information above from you.
3. Once the issue or problem component is identified, we will request a purchase order from you for to send out the replacement part you need.
4. Once the replacement purchase order has been processed, we will send out a replacement part for you.
5. Along with the replacement part, we will send you a Return Material Authorization form and a labor authorization form (if you are in the first year of coverage) with instructions on how to return the defective part from your dryer and how to file a claim for the labor coverage. Both forms will also be sent to you electronically at the time of the part shipment.
6. Once the defective part returns to us, it will be evaluated and if found to be warrantable, credit will be issued to you on the order for the replacement part.
7. If labor coverage applies, your claim will be reviewed upon receipt and credit will be issued to your account per our warranty rate schedule.

415 East Lake Road
Airdrie, AB T4A 2J7
Tel. (403)945-1988
Fax (403)945-1910

Northwest Equipment Warranty Rate Schedule NW Series Dryers	
Dryer Component	**Time to Replace**
Purge Regulator	1.0 hours
Repressurization Valve	1.0 hours
Pressure Gauge	0.25 hours
Drain Assembly	PARTS COVERAGE ONLY
Exhaust Solenoid	1.0 hours
Purge Check Valve	1.0 hours
Outlet Check Valve	1.0 hours
Inlet Valve	1.0 hours
Control Board	2.0 hours
Warranty Labor Rate	**$65.00 per hour**
Warranty Travel Rate	**$65.00 per hour (max 4 hours)**

Northwest Equipment has no other warranty whatsoever, expressed or implied and all warranties of merchantability and fitness for a particular purpose are hereby disclaimed by Northwest Equipment. Northwest Equipment shall in no case, be subject to any obligation or liability whatsoever with respect to product or services manufactured or furnished by it or any acts of omission relating thereto.

The remedy provided under this warranty shall be the sole, exclusive, and only remedy available to the purchaser. Under no circumstances shall Northwest Equipment be liable for any special indirect, incidental, or consequential damage, losses or delays however caused.

Committed to Quality and Reliability

1-403-945-1988

415 East Lake Road
Airdrie, AB T4A 2J7
Tel. (403)945-1988
Fax (403)945-1910

FORM: NW1103-01
Printed in U.S.A.