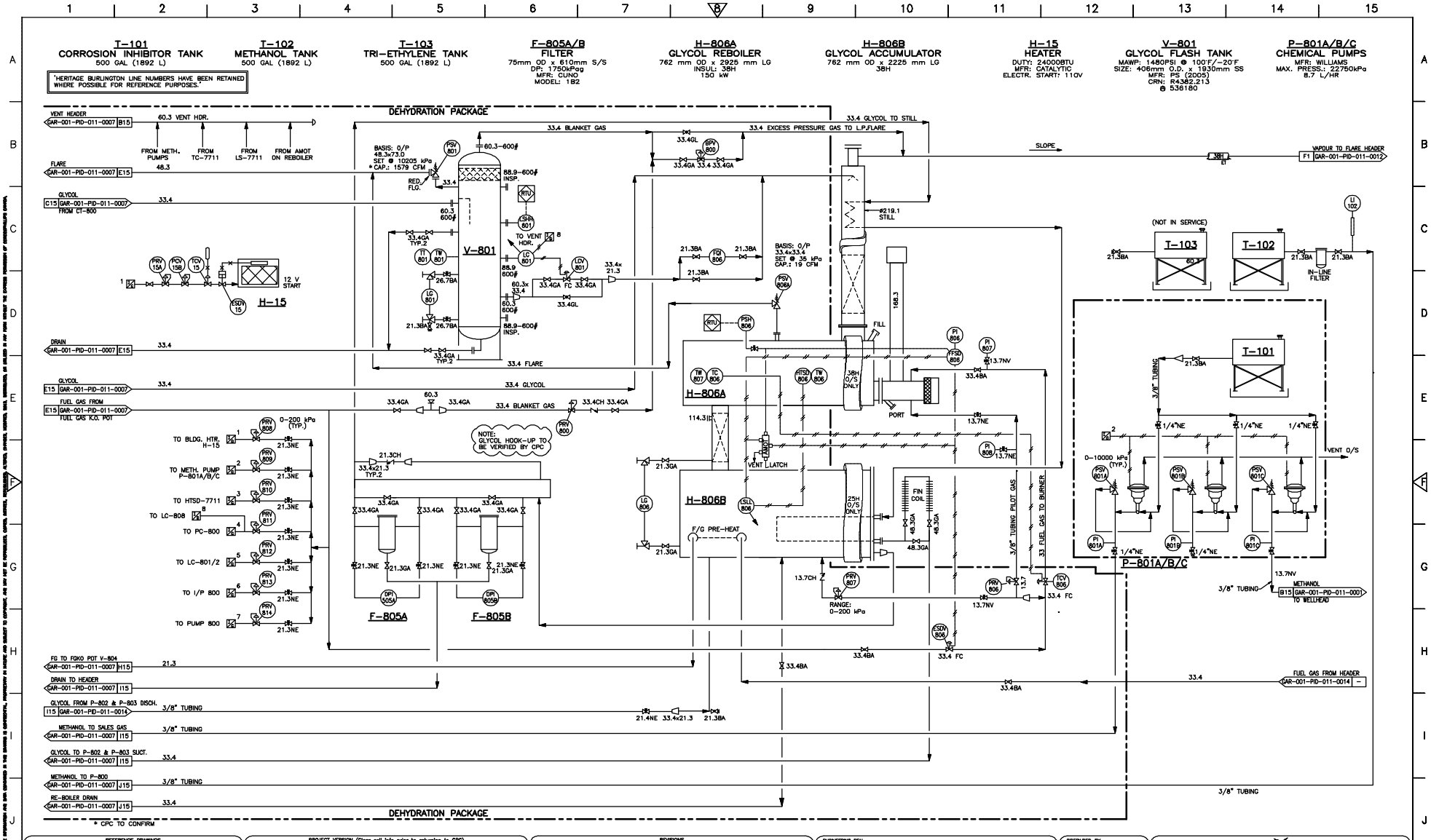

REFERENCE DRAWINGS	
DWG No.	TITLE

PROJECT VERSION (Clear cell info prior to returning to CPC)						
VER.	DATE	BY	CHK'D DFTG	CHK'D ENG	APP'D PM	VERSION ISSUE

REVISIONS						
REV.	DATE	BY	CHK'D DFTG	CHK'D ENG	APP'D PM	REVISION ISSUE
3	07/08/16	LLZ				REDRAWN FROM DWG 03.031-032.02 (VECO #40092-0120)
4	07/08/16	LLZ				AS-BUILT PER VECO MARK-UPS (VECO #40092-0120)
5	09/02/16	AF				AS-BUILT PER CLIENT REDLINES NETWORK#10238817

ENGINEERING SEAL

PREPARED BY
VECO CANADA LTD.
Alliance Group

PERMIT

ConocoPhillips
Canada

15-21 GARRINGTON CENTRAL GAS FACILITY

DEHYDRATOR

P&ID

LEGAL DESC. FROM:
15-21-36-05 W5M

LEGAL DESC. TO (IF APPL.):

LEGACY DWG NO.: 0120-P-D-0008
ENG. CO. PROJ. NO.: 40092-0120

SCALE: N.T.S.
DATE: 07/05/16

CPC DWG. NO.: GAR-001-PID-011-0008

REV.: 5