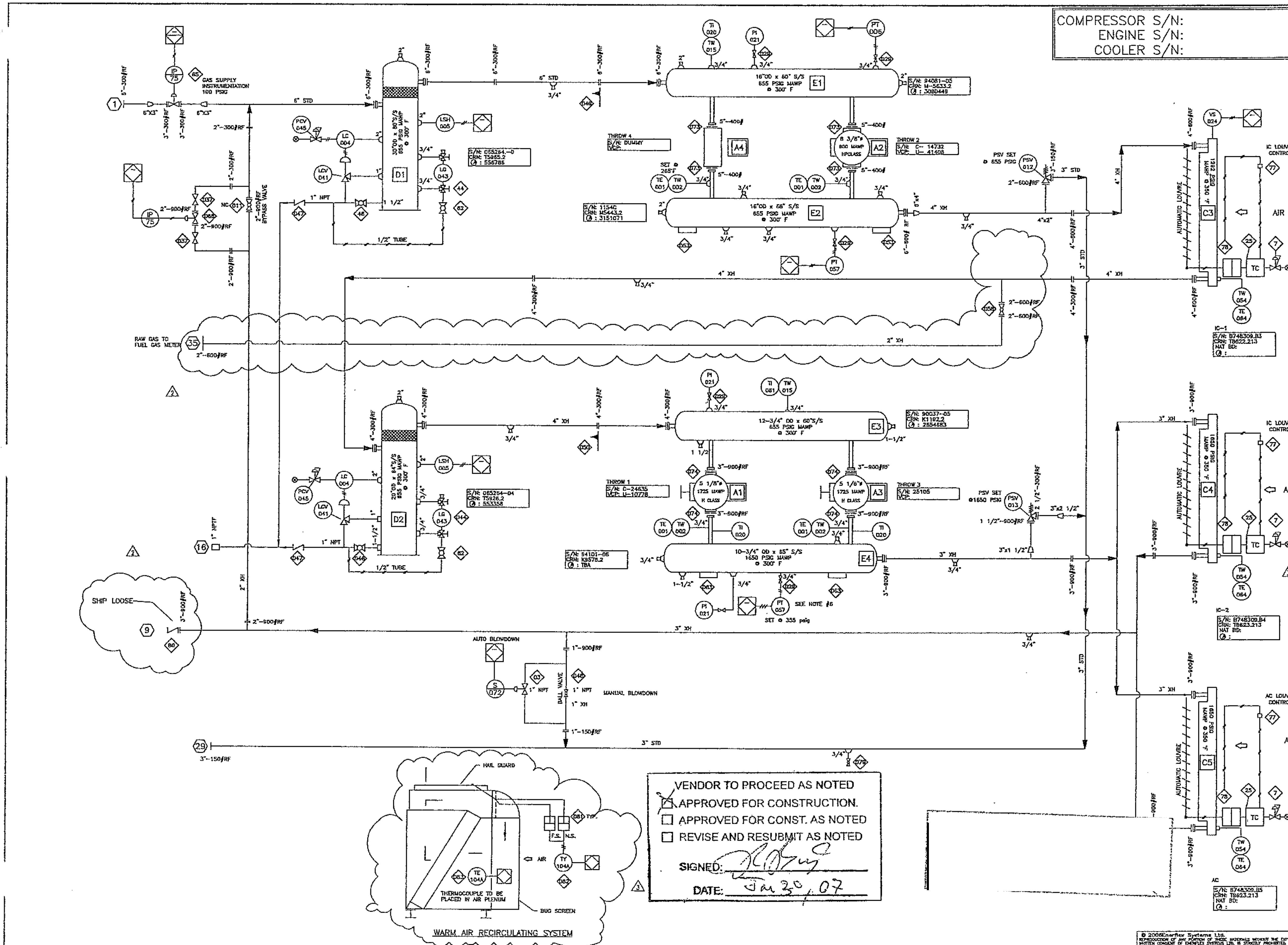

BILL OF MATERIAL PHASE 50

ITEM	QTY.	NEW/EXISTING	DESCRIPTION
001	4	NEW	THERMOCOUPLE, TYPE "K" 316, 1/4" ALL TEMP,WIKA,(A414-K120-VSS-8)
002	4	NEW	THERMOWELL, WIKA, 3/4" MNPT PROCESS X 1/2" NPT INSTR.
			CONNECTION, U = 2-1/2" 304SS
003	1	NEW	FISHER D4 CONTROL VALVE, AUTO BLOWDOWN, 1" NPT 0-33PSI.
004	2	104907	LEVEL CONTROLLER, 2" NPT, NACE, FISHER 12-XB, c/w PVC DISPLACER
005	2	104499	LEVEL SWITCH, MURPHY, L1200, 2" NPT, XP, CSA, BUOYGLAS
006	1	NEW	PRESSURE TRANS 1/4" NPT WIKA.
007	3	112311	REGULATOR 1/4" NPT, 5-35,FISHER 67C-414/PM C/W HAND WHEEL.
011	1	108332	BALL VALVE, 2"-900# RF, WKM 370D4-21-NHF-21 TRUENION MOUNT
012	1	101192	RELIEF VALVE, 2"-600#RF X 3"-150#RF, 0.785" ORIFICE,CS.
			MODEL: CONSOLIDATED 1912 HC SET @655 PSIG
013	1	114434	RELIEF VALVE,1 1/2"-900#RF X 2 1/2"-350#RF, 0.307" ORIFICE,CS.
			MODEL: CONSOLIDATED 1914 FC SET @ 1650 PSIG.
015	2	NEW	THERMOWELL, WIKA, 3/4" MNPT PROCESS X 1/2" NPT INSTR
			CONNECTION U=4.5" 304SS.
020	3	NEW	TI,5" DIAL, LF, 4"STEM,0-300 DEG F, DUAL SCALE,(TREND)
021	3	NEW	PI, WIKA 233.53 4" DIAL, DUAL SCALE, 1/2" NPTM 0-1000 psig
024	1	104624	VIBRATION SWITCH, COMPLETE WITH MANUAL RESET, MUPRHY, VS2
025	3	104085	TEMPERATURE CONTROLLER, HT-12,1" MNPT X 12" LONG PROBE, SS-12SS KIMRAY
029	6	602196	NEEDLE VALVE, CENTURY CM2-3-M647-B-V,3/4" NPTM X 1/2" FNPT CS
031	5	NEW	PRESS. TRANS. 0-1000 psig 1/4" NPT, WIKA
037	2	110037	BALL VALVE, WKM 2"NPT,3000# WOG,FP,C/W LOCKING HANDLE
041	2	104854	LEVEL CONTROL VALVE , FISHER D2, X3 1" NPT,LCC,FC 6-30PSI
043	2	104428	LEVEL GAUGE, PENBERTHY CS W/T REFLEX FLAT FLASS 1820# 1RL7, 1RM7
			OVERALL LENGTH 11.75", VISIBLE GLASS: 10.25"
044	2	104462	GAUGE VALVES, PENBERTHY 330j, 3/4" NPTM, CS 3434#
045	2	602295	REGULATOR, FISHER 67CFR, 5-35 PSI C/W PI & MT BRACKET
046	3	103049	BALL VALVE, 1"NPT, WKM B136-CS-02-CS-HL, 3000#, WOG, CS
047	2	103069	CHECK VALVE, 1"NPT, SMITH C80-00000, 600# WOG CARBON STEEL
049	1	104250	CONE STRAINER, 6"-300#RF, 100%, 316SS, 40 MESH, SCH STD
050	1	104249	CONE STRAINER, 4"-300#RF, 100%, 316SS, 40 MESH, SCH XH.
053	2	SHOP	BOTTLE WEDGE SUPPORTS W/ SADDLE ADJUSMENTS
054	3	NEW	THERMOWELL, WIKA, 1" MNPT PROCESS X 1/2" NPT U=10" 304SS
057	2	107993	PRESS. TRANS. 0-600 psig, 1/4" NPT WIKA
058	1	107993	BALL VALVE 2"-600#RF, WKM TRUENION MOUNT
060	1	107989	PRESS. TRANS. DIAL, DUAL SCALE, 1/4" NPTM 0-1500 psig , WIKA
061	1	NEW	TI,TREND 33000, DUAL SCALE, 3" DIAL, 4" STEM, 50-500 DEF, DUAL SCALE
062	2	109060	VALVE BALL, 1/2" NPT, WKM B136-CS02-CS-HL 2250# WOG FP
			C/W LATCH HANDLE
063	2	SHOP	BOTTLE WEDGE SUPPORTS W/ SADDLE ADJUSTMENTS
064	3	NEW	THERMOCOUPLE TYPE " K" 316 1/4" ALL TEM. WIKA, (A414-K144-U55-8)
065	1	NEW	FISHER 667-45 ET SUCTION CONTROL VALVE 3"-300#RF, FACE TO FACE 12.5"
066	1	NEW	FISHER D4 CONTROL VALVE, 60% CAPACITY BYPASS 2"-900#RF
072	1	NEW	SOLENOID ASCO 3 WAY EF8320G202
073	4	NEW	ORIFICE PLATE, FULL BORE, 5"-400# RF
074	4	NEW	ORIFICE PLATE, FULL BORE, 3"-900# RF
075	2	106134	TRANSDUCER I/P 4-20 MA INPUT, 6-30 PSIG OUTPUT FAIRCHILD (PANEL MOUNT)
077	3	104925	ACTUATOR 3-15 PSIG, GAR20, 501-12-3-15, C/W LINKAGES
078	3	NEW	HUB FLANGE 3"-900#RF X1-1/2" NPT SA105N
079	1	NEW	BALL VALVE, 3/4" NPT C/W LOCKING HANDLE
080	1	NEW	CHECK VALVE, NON SLAM 3"-900# RF
081	2	NPN-REQ	AUTO LOUVER ACTUATOR GARZO, SUPPLIED BY AIR-X
082	1	120478	TANSDUCER, I/P, 4-20MA INPUT,6-30 PSIG OUTPUT, XP,[FAIRCHILD,TCX17800-403-2]
083	3	NPN-REQ	T' COUPLE, J TYPE, 316SS, 7.5"[THERMOKIETICS, J125-316-5-7.5-B-82X-0048-99]

GENERAL NOTES

1. THIS DRAWING IS NOT TO BE USED FOR CONSTRUCTION UNLESS STAMPED "ISSUED FOR CONSTRUCTION".
2. ALL PROCESS PIPING TO BE CLAMPED AS NEAR TO ALL ELBOWS AS POSSIBLE, REFER TO DRAWING 12.8005. REFER TO DRAWING 12.8006.
3. FOR DESIGN PARAMETERS REFER TO PROJECT SCOPE SUMMARY DRAWING.
4. FOR CUSTOMER CONNECTIONS REFER TO GENERAL ARRANGEMENT DRAWING.
5. PIPE NIPPLES 1-1/2" AND SMALLER TO BE MIN. 160 WALL THICKNESS.
6. SET POINTS TO BE MONITORED AND REVISED UPON CONFIRMATION WITH ACTUAL PERFORMANCE PARAMETERS, (TSH = DISCHARGE TEMPERATURE (DEG. F) + 25 DEG. F.), (PSH AND DP TO BE CALCULATED BASED ON ACTUAL SUCTION/DISCHARGE PRESSURE AND CYLINDER ROD LOADING LIMITS).

LEGEND

CUSTOMER CONNECTIONS
LOCALLY MOUNTED
SOD CONTROL PANEL
LOCAL GAUGE PANEL
MANUFACTURED COMPONENTS
MAJOR COMPONENTS
VENT LINE (TUBING)
DRAIN LINE (TUBING)
OIL LINE (TUBING)
PNEUMATIC SIGNAL (TUBING)
ELECTRIC SIGNAL CONNECTIONS
UTILITIES TUBING
LOW POINT DRAIN (PLUGGED)
ORIFICE OR SPACER PLATE 1/8" THK
ITEM TO BE SHIPPED LOOSE FOR FIELD INSTALLATION
BULKHEAD CONNECTION
INSTRUMENT SUPPLY GAS
PROGRAMMABLE LOGIC CONTROL

REV	DESCRIPTION	DATE	ENG	DWN	CHK
3	ADD WARM AIR RECIRC.	07/01/16	RL	DZ	RL
2	ADDITION OF RAW GAS LINE	06/12/22	RL	DZ	RL
1	REVISED AS PER VESSEL DWGS	06/12/13	RL	DZ	RL
0	ISSUED FOR APPROVAL	06/12/06	RL	TD	RL

CompressionServices
ENERFLEX

5049-74 Avenue SE Calgary AB Canada T2C 3H2 Canada Tel. +1.403.720.3822 Fax +1.403.720.3785
www.enerflex.com

TITLE: PROCESS & INSTRUMENTATION DIAGRAM
ARIEL JGH/4; WAUKESHA F3521GSI; A-X-CHANGERS 132EHS
COMPRESSOR PACKAGE

FOR:

: RL
06/11/30

OPER'N #: 50

DATE: DEC 28/06 LS

PROJECT #:

VENDOR TO PROCEED AS NOTED

☐ APPROVED FOR CONSTRUCTION.

☐ APPROVED FOR CONST. AS NOTED

☐ REVISE AND RESUBMIT AS NOTED

SIGNED: _____

DATE: _____

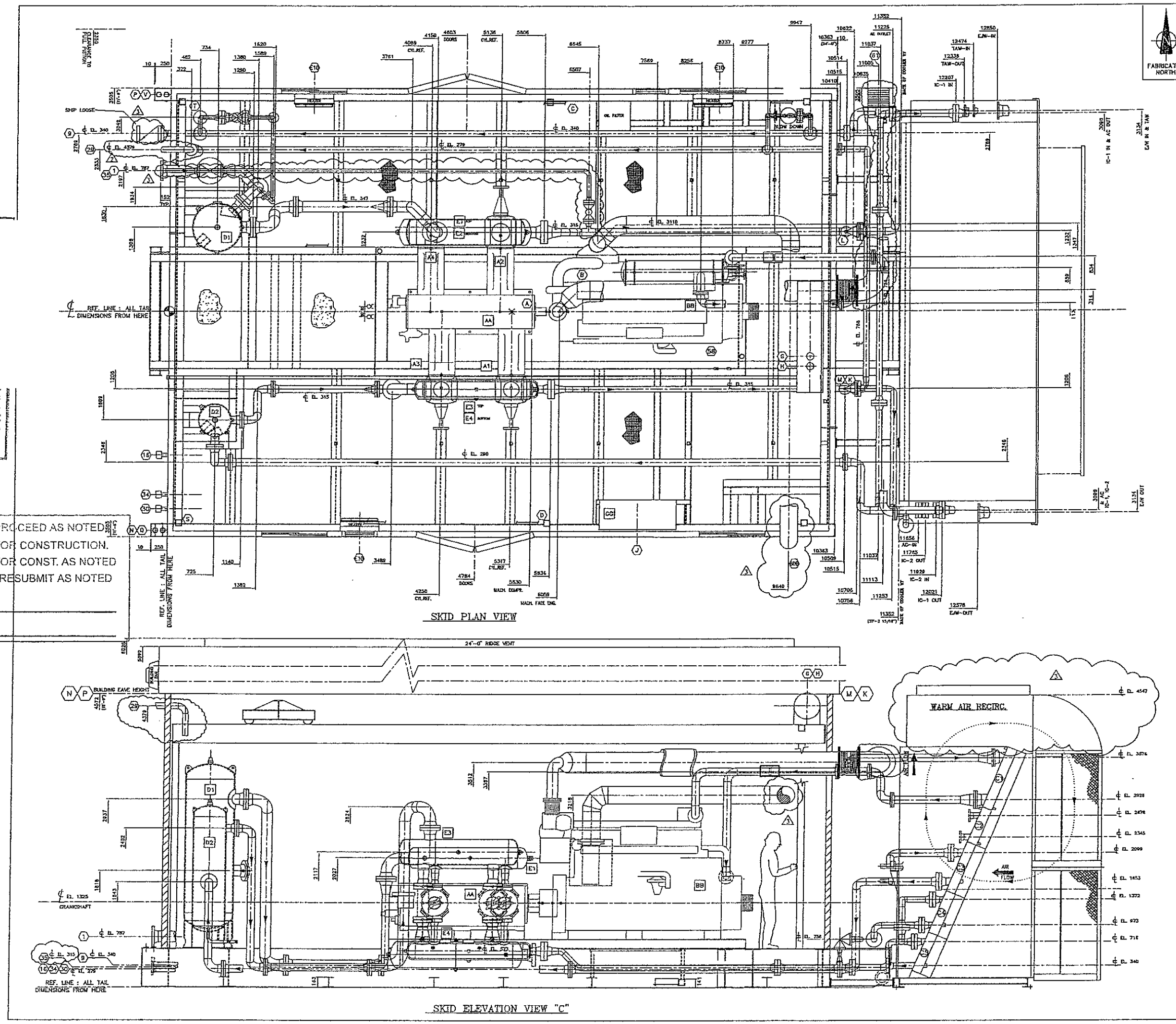

CUSTOMER CONNECTIONS

NO.	DESCRIPTION	SIZE
1	STAGE 1 INLET	8"-300# RF
9	FINAL DISCHARGE	3"-900# RF
16	SCRUBBER DRAIN HEADER	1" NPT
29	PRESSURE RELIEF HEADER	3"-150# RF
30	FUEL GAS SUPPLY	1 1/2" NPT
34	START GAS SUPPLY	2" NPT
45	RAW GAS TO FUEL GAS METER	2" -600# RF
58	UNIT GLYCOL DRAIN (LOCAL)	3/4" NPT
80A/B	ENGINE AIR INTAKE	10" TUBE
81	ENGINE EXHAUST	12" TUBE

OTHER CONNECTIONS

CONN.	DESCRIPTION	SIZE
A	COMPRESSOR OIL FILL (LOCAL)	2" NPT
B	ENGINE OIL TANK FILL (LOCAL)	2" NPT
C	COMPRESSOR OIL TANK FILL	1" NPT
D	ENGINE OIL TANK FILL	1" NPT
E10	HEATER CONNECTION	
G	JACKET WATER SURGE FILL	2"-7# PRESS.CAP
H	AUXILIARY WATER SURGE FILL	2"-7# PRESS.CAP
J	CONTROL PANEL VENT	1" NPT
K	START GAS VENT	3" NPT
L	COMPRESSOR CRANK CASE VENT	2" TUBE
M	CONTROL VENT HEADER	1" STACK
N	PACKING / DISTANCE PIECE TANK VENT	2" NPT
P	WASTE OIL TANK VENT	2" STACK
Q	PACKING VENT AND TANK	2" STACK
R	ENGINE OIL TANK VENT	1/2" NPT
T	COMPRESSOR OIL TANK VENT	3/4" NPT
U	PACKING / DISTANCE PIECE TANK PUMPOUT	2" NPT
V	WASTE OIL TANK PUMPOUT	2" NPT

MAJOR COMPONENTS

AA ENGINEERING
(1) ARIEL, JGH/4 S/N: F-23633
A1/A3 (2) 5-1/8" Dia. H CLASS CYL. MAWP 1725 PSIG. S/N: C-24435/25185
A2 (1) 8-3/8" Dia. HP CLASS CYL. MAWP 800 PSIG. S/N: C-14732
A4 (1) DUMMY

BB ENGINE
(1) WAUKESHA, F3521GSI S/N: 337251

CC COOLER
(1) AIR-X-CHANGERS 132DH S/N: 74536A
C1 (1) ENGINE JACKET WATER SECTION - DESIGN PRESSURE 14 PSIG @ 300/-20 °F. S/N:87-46369B.B1
C2 (1) AUXILIARY WATER SECTION - DESIGN PRESSURE 14 PSIG @ 330/-20 °F S/N:87-46369B.B2
C3 (1) INTERSTAGE COOLER SECTION #3 - DESIGN PRESSURE 1285 PSIG @ 350/-20 °F S/N:87-46300B.B3
CPM: TM623.253
C4 (1) INTERSTAGE COOLER SECTION #2 - DESIGN PRESSURE 1650 PSIG @ 350/-20 °F S/N:87-46300B.B4
CPM: TM623.253
C5 (1) AFTERCOOLER SECTION - DESIGN PRESSURE 1650 PSIG @ 350/-20 °F S/N:87-46300B.B5
CPM: TM623.253

DD SCRUBBERS
D1 30" Dia. x 72" S/E - MAWP: 855 PSIG @ 300°F S/N:065264-01
D2 30" Dia. x 84" S/E - MAWP: 655 PSIG @ 300°F S/N:065264-04

EE BOTTLES
E1 18" Dia. x 60" S/E - MAWP: 645 PSIG @ 300°F S/N:84089-05
E2 16" Dia. x 68" S/E - MAWP: 655 PSIG @ 330°F S/N:11542
E3 12" Dia. x 82" S/E - MAWP: 655 PSIG @ 300°F S/N:00033-06
E4 10" Dia. x 82" S/E - MAWP: 1650 PSIG @ 300°F S/N:84121-06

GG STARTING PANEL
(1) XC5000

GENERAL NOTES

1. THIS DRAWING IS NOT TO BE USED FOR CONSTRUCTION UNLESS STAMPED "ISSUED FOR CONSTRUCTION".
2. DO NOT SCALE THIS DRAWING.
3. ALL DIMENSIONS ARE IN MILLIMETERS.
4. FOR DESIGN PARAMETERS AND PAINT SPECIFICATION REFER TO PROJECT SCOPE SUMMARY DRAWING NO. 35005264
5. ALL PIPING MUST BE SELF SUPPORTING BEYOND UNIT CONNECTIONS.
6. LOCATIONS OF CUSTOMER CONNECTIONS ARE NOT GUARANTEED AS THESE DIMENSIONS MAY BE SUBJECT TO AN ACCUMULATION OF TOLERANCES ON SEVERAL COMPONENTS. MINOR CHANGES MAY ALSO BE MADE ON SCREWED SERVICE PIPING IN ORDER TO FACILITATE INSTALLATION AND MAINTENANCE. ON COMPLETION A FINAL DRAWING WILL BE ISSUED WITH FIELD CONNECTIONS CORRECTED TO 5 mm.
7. IT IS OUR RECOMMENDATION THAT ANY PRE-SPOOLING TO THE COMPRESSOR PACKAGE CONTAIN FIELD WELDS AT ALL CUSTOMER CONNECTIONS.
8. THE FOLLOWING ITEMS WILL BE SHIPPED LOOSE FOR FIELD INSTALLATION BY OTHERS: MUFFLER, EXHAUST PIPING, PIPING SPOOLS, SURGE TANK, COOLER.
9. UNIT MOUNTS ARE APPROXIMATE AND MAY BE SUBJECT TO CHANGE UPON COMPLETION OF FABRICATION. FOUNDATION DESIGN IN GENERAL, PILE DESIGN, PILE LOCATION AND QUANTITY OF PILES ARE THE RESPONSIBILITY OF THE CUSTOMER.
10. — WILL INDICATE AS-BUILT.
11. PIPING FLANGES ASSEMBLY TO COMPLY WITH ASME B31.3, SECTION 335.1.1. MATING PIPE FLANGE FACES TO BE ALIGNED TO WITHIN 1mm IN 200mm MEASURED ACROSS THE DIAMETER. FLANGE BOLT HOLES TO BE ALIGNED WITHIN 2mm MAXIMUM OFFSET.

COMPRESSOR UNBALANCED FORCES @ 1200 RPM

	PRIMARY	SECOND-DARY
HORIZONTAL FORCE, LBS	320	73
VERTICAL FORCE, LBS	0	0
HORIZONTAL COUPLE, LBS-FT	4144	37
VERTICAL COUPLE, LBS-FT	14438	0

Thumbs Landing Only
Down Shaft Includes Side Loading

CAD
MAKE NO REVISIONS TO THIS REPRODUCIBLE

CUSTOMER MATERIAL CONFIRMATION

CONFIRMATION OF CUSTOMER OWNED PIPING MATERIALS WILL REMAIN THE SOLE RESPONSIBILITY OF THE UNIT'S PRESENT OWNER. PLEASE NOTE THAT REGISTRATION OF THE COMPLETED PROCESS SYSTEM WILL ALSO REMAIN THE RESPONSIBILITY OF THE OWNER.

© 2006Enerflex Systems Ltd.
REPRODUCTION OF ANY PORTION OF THESE MATERIALS WITHOUT THE EXPRESS WRITTEN CONSENT OF ENERFLEX SYSTEMS LTD. IS STRICTLY PROHIBITED. THESE MATERIALS SHALL NOT BE USED FOR ANY PURPOSE OTHER THAN THE REPAIR AND MAINTENANCE OF THE PRODUCTS TO WHICH THEY RELATE.

SHIPPING WEIGHTS	KG.	LBS.
ENGINE	6800	15000
COMPRESSOR (C/W CYLINDERS)	6455	14229
COOLER	5443	12000
VESSELS	2353	11800
SKID	12180	26883
MISC. & LIQUIDS	26817	59118
BUILDING	3547	7820
CRANE	2472	5450
-	-	-
-	-	-
TOTAL SHIPPING WT.	72317	159270
SHIPPED LOOSE ITEMS	726	1600
TOTAL UNIT WEIGHT	73243	161479

UNIT DIMENSIONS	LENGTH		WIDTH		HEIGHT	
	mm	ft/in	mm	ft/in	mm	ft/in
MAIN SKID w/ ALL EQUIP. MOUNTED	12609	41'-4"	7312	23'-9"	4686	15'-4"
SHIPPING DIMENSIONS	14214	46'-7"	7312	24'-0"	4293	28'-3"
COOLER	1981	6'-6"	4928	16'-2"	2591	17'-0"

REV	DESCRIPTION	DATE	DRAWN BY	CHECKED BY	ENGR. APP.
3	ADDITION OF RAW GAS LINE	06/12/19	SS	TD	RL
2	MOVED STRAINT LINE	06/11/28	SS	TD	RL
1	REVISED FLARE HEADER	06/11/12	SS	TD	RL
0	ISSUED FOR CONSTRUCTION	06/12/01	SS	TD	RL

CompressionServices
ENERFLEX

TITLE
GENERAL ARRANGEMENT
ARIEL JGH/4, WAUKESHA F5521GSI, AIR-X-CHANGERS 132DH5
COMPRESSOR PACKAGE

FOR: