ALLIED WATER INTEGRATION
PEOPLE + TECHNOLOGY = SOLUTIONS

ALLIED WATER INTEGRATION LTD
#48 - 5335 6 STREET N.E.
CALGARY, AB CANADA T2K 5Y4
OFFICE 403.295.0055
FAX 403.274.5829
ADMIN FAX 403.295.9104

ALLIED WATER INTEGRATION

# The Design Basis Memo of A Return Water Treatment Facility for Secure Energy Services Inc.

| | |
|---|---|
| Project: IPN-00001 | Document: DBM-0000001 |
| Compiled: KM and CY | Reviewed: AdW |
| Revision: 01 | Date: 17 June 2013 |

ALLIED WATER INTEGRATION
PEOPLE + TECHNOLOGY = SOLUTIONS

ALLIED WATER INTEGRATION LTD
#48 - 5335 6 STREET N.E.
CALGARY, AB CANADA T2K 5Y4
OFFICE 403.295.0055
FAX 403.274.5829
ADMIN FAX 403.295.9104

## Contents

**1 Introduction ..... 1**
**2 Feed Water Quality ..... 1**
**3 Treated Water Quality ..... 2**
**4 Jar Testing ..... 3**
4.1 Observation ..... 3
4.2 Testing Results ..... 3
4.3 Interpretation of the Test Results ..... 4
**5 Conceptual Design ..... 4**
**6 Plant Performance ..... 6**
**7 Process Description ..... 7**
7.1 Chemical Reactions and Flocculation ..... 7
7.2 Settling and Clarification ..... 7
7.3 Dissolved Air Flotation ..... 7
7.4 Media Filters ..... 7
7.5 Cartridge Filters ..... 8
7.6 Chemicals Used ..... 8
7.7 Instrumentation and Control ..... 8
7.8 Major Equipment List ..... 9
7.9 Chemical Systems ..... 9
7.10 Major Electrical Components ..... 10
7.11 Major Structural Components ..... 10
**8 Streams and Wastes Entering and Leaving the Plant ..... 10**
8.1 Details of the Off-Gasses ..... 10
8.2 Details of the Slurry ..... 11
**Appendix A: Jar Test Analysis Results ..... 12**
**Appendix B: Process Flow Diagram ..... 15**
**Appendix C: Pan America Environmental DAF-85 Details ..... 17**
**Appendix D: MSD Sheets of Chemicals Used ..... 21**

ALLIED WATER INTEGRATION LTD
#48 - 5335 6 STREET N.E.
CALGARY, AB CANADA T2K 5Y4
OFFICE 403.295.0055
FAX 403.274.5829
ADMIN FAX 403.295.9104

# 1 Introduction

It is a main goal of Secure Energy Services Inc (Secure) to conduct its business in an environmentally friendly manner whilst being economic and profitable. This goal drives Secure to frequently review its practices and include any improvements or modifications which prove to satisfy these goals and enhance the overall performance and environmental friendship of its facilities. Accordingly, Secure is venturing the addition of a return water treatment plant to its facility located in Grand Prairie.

The current facility includes settling and skimming. Clear water (sweet water) is discarded in disposal wells and the slurry is further treated and sent to a landfill.

Secure considered the benefits and costs of different treatment options and found that the best and most feasible approach at this stage was to treat and reclaim water for slick fracturing (fracking).

The current project aims at treating a portion of the return water for reuse in fracking. This treatment process will reduce both the amount of fresh water used in the fracking process and the amount of water disposed of in disposal wells. The return water treatment plant is sized to produce 500 $m^3$/day of treated water.

In addition to the environmentally beneficial reduction of fresh water usage and ultimate loss of disposal wells, it also reduces stress on the roads for water hauling and the associated emissions from the hauling trucks and dust disturbance into the atmosphere. It is also driven by economics where the water for industrial use in these far areas is getting increasingly expensive. Furthermore, it is a step ahead for compliance with anticipated more stringent regulations in the usage of water for this and similar kinds of applications. The size of the plant is selected to be suitable for an industrial scale process and at the same time be manageable for moving and relocation.

Secure Energy Services Inc contracted Allied Water Integration Ltd. (AWI) to design, build and commision the proposed return water treatment system.

# 2 Feed Water Quality

Feed water to the treatment plant is pretreated (settled and skimmed) return water (sweet water). Please refer to the following table for a summaryof the analysis results of a raw feed water sample supplied by Secure and analysed by ALS labs. This sample is to represent the water quality fed to the proposed treatment plant.

ALLIED WATER INTEGRATION
PEOPLE + TECHNOLOGY = SOLUTIONS

ALLIED WATER INTEGRATION LTD
#48 - 5335 6 STREET N.E.
CALGARY, AB CANADA T2K 5Y4
OFFICE 403.295.0055
FAX 403.274.5829
ADMIN FAX 403.295.9104

| Sweet Water pumping/settling tank # 406 at SGPFST | | | | | | | | | | | | | | | | |
|---|---|---|---|---|---|---|---|---|---|---|---|---|---|---|---|---|
| | | Analyses provided by Secure | | | | | | | | | | Minimum | Maximum | Average | Jar test sample | Target |
| Sample # | Units | L1169601 | L1171169 | L1172215 | L1174634 | L1175371 | L1178405 | L1181146 | L1183365 | L1184975 | L1186426 | | | | B339001_GK0796 | |
| Date extracted | | No date | 2012/07/01 | 2012/07/04 | 2012/07/06 | 2012/07/07 | No date | No date | No date | 2012/07/26 | 2012/07/30 | | | | 2013/05/01 | |
| pH | Unitless | 7.79 | 7.81 | 6.74 | 7.88 | 6.8 | 6.65 | 7.3 | 7.04 | 6.55 | 6.34 | 6.34 | 7.88 | | 6.76 | Neutral |
| Aluminum (Al)-Total | mg/L | <2.5 | 1.2 | 1.77 | <0.5 | 0.69 | 1.66 | 0.42 | <0.5 | 0.606 | <0.5 | 0.42 | 1.77 | 1.04 | | |
| Barium (Ba)-Total | mg/L | 235 | 172 | 104 | 65.4 | 92.4 | 126 | 90.3 | 17.7 | 149 | 148 | 17.7 | 235 | 120 | 2400 | <50 |
| Strontium (Sr)-Total | mg/L | | | | | | | | | | | | | | 720 | <50 |
| Boron (Total) | mg/L | 5.7 | 2.8 | 1.4 | 12 | 18.7 | 14.1 | 4.25 | 19 | 3.1 | 3.4 | 1.4 | 19 | 8.4 | | |
| Calcium (Ca)-Total | mg/L | 535 | 920 | 1790 | 768 | 1560 | 670 | 581 | 1960 | 1080 | 1120 | 581 | 1960 | 1098 | 2900 | <5000 |
| Magnesium (Mg)-Total | mg/L | 89.5 | 74.2 | 93.7 | 150 | 216 | 74 | 54.8 | 304 | 86.3 | 82.3 | 54.8 | 304 | 122 | 190 | <5000 |
| Iron (Fe)-Total | mg/L | 37.6 | 27.3 | 62.4 | 22.2 | 38.3 | 28.5 | 154 | 8.49 | 49.1 | 33.9 | 8.49 | 154 | 46 | 54 | <20 |
| Manganese (Mn)-Total | mg/L | 0.87 | 1.13 | 2.33 | 0.57 | 1.21 | 1.02 | 2.26 | 1.22 | 1.85 | 1.23 | 0.57 | 2.33 | 1.4 | 1.4 | <20 |
| Potassium (K)-Total | mg/L | 114 | 181 | 413 | 242 | 572 | 796 | 229 | 850 | 4100 | 380 | 181 | 4100 | 788 | 1500 | |
| Sodium (Na)-Total | mg/L | 6670 | 4380 | 2560 | 12600 | 13400 | 5570 | 3420 | 21400 | 4560 | 4730 | 2560 | 21400 | 7929 | 29000 | 58970 |
| Chloride (Cl) | mg/L | 11000 | 8130 | 6050 | 20100 | 23600 | 10400 | 11400 | 31500 | 11400 | 7630 | 6050 | 31500 | 14121 | 62000 | 91000 |
| Sulfate (SO4) | mg/L | <6.0 | 112 | 124 | 279 | <6 | <6 | 115 | <6 | 171 | 32.7 | 32.7 | 279 | 86 | <10 | <1000 |
| Conductivity (EC) | dS/m | 33.3 | 23.3 | 19.8 | 60.8 | 65.8 | 33.3 | 18.8 | 99.8 | 34.2 | 24.3 | 18.8 | 99.8 | 41.3 | 110 | |
| TSS | mg/L | | | | | | | | | | | | | | 910 | Nil |
| Total hydrocarbons | Wt % | 0.005 | 0.01 | 0.03 | 0.06 | 0.08 | 0.03 | 0.06 | 0.009 | 0.42 | 0.13 | 0.009 | 0.42 | 0.083 | 0.038 | Nil |

**Notes:**

- Total hydrocarbons: Extractable C11 to C60.
- TSS target is undetectable higher than 10 micron absolute size.
- Total hydrocarbons target is nil for insoluble or emulsified phases.
- Jar test sample managed by AWI and analysed by MAXXAM. ASL analysed the raw water sample for Secure.
- The detection limit was used for average calculations, e.g. a value <2.5 was taken as 2.5.
- Date format is DD/MM/YYYY.
- Total sodium chloride target value is <15%.
- Target values subjet to final confirmation by Secure.

## 3 Treated Water Quality

Secure Energy Services established the criteria listed below as the goal of the current phase of treatment.

- Insoluble solids: Filtered through a 10 µm absolute filter.
- Iron: < 200 ppm.
- Salinity: < 15% chloride.
- Calcium and magnesium: each < 5,000 ppm
- Barium and strontium: each < 50 ppm
- Sulfate: < 1,000 ppm
- pH: 7 (acceptable range of 6.0 to 8.0)
- Insoluble hydrocarbons: Nil

ALLIED WATER INTEGRATION LTD
#48 - 5335 6 STREET N.E.
CALGARY, AB CANADA T2K 5Y4
OFFICE 403.295.0055
FAX 403.274.5829
ADMIN FAX 403.295.9104

# 4 Jar Testing

Secure sent a large sample to AWI to perform jar testing and establish a design criteria. AWI sent a sample of this raw feed water to MAXXAM for chemical analysis and the results are provided in the following table:

| Constituent/Parameter | Unit | Value | Target |
|---|---|---|---|
| pH | Unitless | 6.76 | Neutral |
| Total Suspended Solids | mg/L | 910 | |
| Dissolved Nitrate (NO3) | mg/L | 40 | |
| Dissolved Nitrite (NO2) | mg/L | 17 | |
| Bicarbonate (HCO3) | mg/L | 320 | |
| Carbonate (CO3) | mg/L | <0.50 | |
| Dissolved Chloride (Cl) | mg/L | 62000 | 150000 |
| Dissolved Sulfate (SO4) | mg/L | <10 | 1000 |
| Dissolved Barium (Ba) | mg/L | 2400 | 50 |
| Dissolved Strontium (Sr) | mg/L | 720 | 50 |
| Dissolved Calcium (Ca) | mg/L | 3100 | 5000 |
| Dissolved Magnesium (Mg) | mg/L | 140 | 5000 |
| Dissolved Iron (Fe) | mg/L | 1.4 | 200 |
| Dissolved Manganese (Mn) | mg/L | 1.2 | 200 |
| Dissolved Potassium (K) | mg/L | 1500 | |
| Dissolved Sodium (Na) | mg/L | 29000 | |
| Total Barium (Ba) | mg/L | 2400 | |
| Total Strontium (Sr) | mg/L | 720 | |
| Total Calcium (Ca) | mg/L | 2900 | |
| Total Magnesium (Mg) | mg/L | 190 | |
| Total Iron (Fe) | mg/L | 54 | |
| Total Manganese (Mn) | mg/L | 1.4 | |
| Total Suspended Solids (TSS) | Mg/L | 910 | Nil |
| Total Extractable hydrocarbons C11 to C60 | mg/L | 380 | Nil |

**Notes:**

- Important parameters of this test are also shown in the previous table for comparison to other water samples.

## 4.1 Observation

Large discrepancies in the raw feed water quality between the Secure/ALS and AWI/MAXXAM samples were found. Barium is 2400 mg/l, which is ten times the highest value in previous samples. Strontium is also very high, but there is no comparison basis due to not being tested in the previous samples. Salinity is almost double than most of the previous samples.

## 4.2 Testing Results

Various jar tests were performed in order to identify better conditions for barium and strontium precipitation in addition to better slurry characteristics. Details of the jar test results are provided in Appendix A.

ALLIED WATER INTEGRATION LTD
#48 - 5335 6 STREET N.E.
CALGARY, AB CANADA T2K 5Y4
OFFICE 403.295.0055
FAX 403.274.5829
ADMIN FAX 403.295.9104

## 4.3 Interpretation of the Test Results

The aim of the jar testing was to examine the precipitation process and the slurry behavior. Multiple tests have been conducted with sodium carbonate and a mixture of sodium carbonate and sodium sulfate as precipitating agents. Poly aluminium chloride (PACl) and aluminum sulfate (Alum) were tested as coagulating agents. Anionic as well as cationic polyelectrolytes (polymers) were tested as coagulation and flocculation aid agents.

Preliminary testing with sodium carbonate as a precipitating agent showed that the PACl is better than the Alum where it produced larger and denser flocs. Precipitation with a mixture of sodium carbonate and sodium sulfate did not result in a large difference between PACl and Alum concerning the slurry behavior. It also showed that the anionic polymer is better than the cationic polymer where it produced clearer water and better flocs.

Precipitation with sodium carbonate alone removed some barium and strontium values from the solution but it did not reach the goals at a reasonable dose. The combined sodium sulfate and sodium carbonate dosing produced denser flocs and complete removal of the barium and a good removal of the strontium, though it did not reach the required strontium level. Also, there were excess sulfates left in solution after precipitation that the doses added. Sodium sulfate dosing shall be adjusted in the field.

An important observation was the occurance of post-precipitation, in which precipitation starts to occur after the clear water is decanted folowing 15 minutes settling in the jar tester. The treated water was very clear for a couple of hours then turned cloudy and became clear again after a few hours with noticable white precipitate forming at the bottom. This is accepted normal in real life chemistry, where the solution was supersaturated and started precipitating the insoluble salts after a while. In fact, some designs enhance the secondary precipitation by the addition of a small quantity of any suitable seeding insoluble salt, which in this case may be calcium sulphate (gypsum).

The slurry volume for the test which used sodium carbonate only was large and not as dense as the slurry with the combination of sodium carbonate and sodium sulfate.

Most of the oil present is adsorbed or comingled with the precipitating solids and no visible floating or emulsified oil is left after the precipitation, coagulation and settling steps.

It is clear that the sample used for the jar testing is different from the rest of the samples in many ways and this affected the jar testing results. Barium is roughly ten times the maximum values in previous samples. The salinity is very high in comparison to previous samples. All these factors made the removal of barium and strontium difficult and required significantly more chemicals. The high salinity affects the precipitation process negatively, where it increased the ionic strength and solubility of the insoluble salts.

Time limitations stopped the jar testing at this stage. The test results led to sufficient interpretation that the final fine-tuning can be done at site in the real plant and that the sample taken for these jar tests does not represent the feed water quality most of the time.

The jar test indicated that for barium can be removed almost completely and about 70% of the strontium value was removed, starting with 2400 mg/L barium and 700 mg/L strontium. That means that 150 mg/l strontium in the feed water can be reduced to less than 50 mg/l.

# 5 Conceptual Design

Constituents' levels and the target values indicate that the parameters which need treatment are the TSS, hydrocarbons, barium and strontium. These will be the focus of the treatment system. The plant shall be designed to treat these constituents based on the average

ALLIED WATER INTEGRATION LTD
#48 - 5335 6 STREET N.E.
CALGARY, AB CANADA T2K 5Y4
OFFICE 403.295.0055
FAX 403.274.5829
ADMIN FAX 403.295.9104

calculated values shown in the first table (Sweet water pumping/Settling tank # 406) to reach the targets established by Secure. The process shall include the following steps:

1. Sodium hypochlorite, if needed is added into the feed line ahead of a static mixer.
2. Precipitating and pH adjustment chemicals are added to the feed water in the first reaction tank and flash mixing is performed.
3. Coagulant is dosed to the water and flash mixing is performed in the second reaction tank.
4. Coagulation/flocculation aid is added and slow mixing is performed in a larger tank to aid flocculation.
5. Water is then fed by gravity to an inclined plate clarifier. Settled slurry is withdrawn from the bottom of the clarifier and is directed to the client's slurry treatment system, whilst the clear water is pumped to two external large volume tanks to allow for a longer retention time.
6. Water from the external tanks are gravity-fed to a dissolved air flotation (DAF) unit inside the plant. Slurry from the external tanks is pumped to the slurry collection tank in the plant.
7. The location of the inclined plate clarifier and the external tanks in the process flow can be swopped to allow for longer retention times before the solution enters the clarifier.
8. The DAF removes the remaining suspended and floating slurry to the top with the aid of injected air into a recirculation pump. The recirculation flow rate is about 50% of the throughput in this equipment.
9. The effluent from the DAF is collected and pumped to the media filters. Slurry from the DAF is pumped to the slurry collection tank.
10. Coagulent and flocculent are added to the media filter feed. The pH is adjusted to neutral by acid or caustic injection into the media filter feed.
11. Media filters removes the remaining turbidity and suspended solids and acts as a secondary barrier and provides more precipitating time for solids removal.
12. The effluent from the media filters feeds to cartridge filters. These act as a tertiary barrier for solids removal and the catridge filter is sized to remove particles 10 microns or higher. Effluent from the cartridge filters are directed to the client's external treated water storage tanks.
13. The feed pump to the media filters provide enough pressure for both the media filter, the cartridge filter and the static head required to fill the client's external treated water storage tanks.

The plant shall be designed according to the following principles:

- The main treatment equipment shall be housed in a single, self-contained winch-tractor building skid.
- Skid size shall be shippable to site and constructed within suitable dimensions.
- The building skid will include lights and heaters.
- Chemicals shall be added as required for precipitation of barium and strontium, pH adjustment, emulsion breaking and to keep hypochlorite residuals to reduce biological growth.
- Ambient air shall be used for air saturation in the DAF.
- Vented volatile organic hydrocarbons shall be routed to client's facility.
- The plant shall be furnished with analyzers, control valves, instruments and control systems, where required, for ease of operation and maintenance while viewing simplicity as a prime characteristic.
- The plant shall be controlled and interfaced using a suitably sized PLC and HMI from a master control center (MCC).
- Electrical design and components shall be rated Class 1 Div 2 explosion proof and shall be CSA inspected.

ALLIED WATER INTEGRATION LTD
#48 - 5335 6 STREET N.E.
CALGARY, AB CANADA T2K 5Y4
OFFICE 403.295.0055
FAX 403.274.5829
ADMIN FAX 403.295.9104

- The treated water will have enough pressure for routing to client's treated water storage.
- Chemical tanks shall be installed over secondary containment pallets.

## 6 Plant Performance

Literature shows that barium and strontium carbonates and sulfates are quite insoluble in water. Solubility products for barium and strontium salts in pure water are (Reference: Handbook of Chemistry and Physics, CRC, 58th Ed.):

- Barium carbonate: 7 x 10-9 (at 16 °C)
- Barium sulfate: 1.08 x 10-10 (at 25 °C)
- Strontium carbonate: 1.6 x 10-9 (at °C)
- Strontium sulfate: 3.81 x 10-7 9 (at 17.4 °C)

Accordingly, the remaining soluble barium and strontium in the presence of a slight excess of the carbonate and/or sulfate ion is well below the maximum permitted value for the treated water. The precipitation reaction and separation of the formed solids is thus a process performed in a controlled manner to prevent precipitation of these insoluble salts later on when in contact with the well formation during water re-use in the fracking process.

It is important to note that for actual return waters there are complications arising from real life conditions, such as:

- The high salinity will increase the ionic strength and increase the solubility due to the increased solubility product. This effect may still be within the required limits, but it is important to consider it along with other factors.
- A possible effect is the supersaturation phenomenon, which is a thermodynamically unstable condition but it may take a very long time for complete precipitation. Supersaturation is higher in lower temperatures.
- Presence of competing ions for precipitation will also take a toll on the chemicals used. Notably among these competing ions are calcium and magnesium. This means that in order to reach a complete precipitation and removal of barium and strontium, calcium and magnesium have to be precipitated and removed during the process as well.
- The possibility of complex ion formation should be investigated thoroughly. Numerous complex ions are soluble in water. For example, iron me be present in a chelated form with organic matter and is thus masked from the precipitating agent. Fortunately most of the iron in the feed water was in the insoluble form and was easily removed in the process and decantating process.

In the designed plant the following conditions were taken into consideration to minimize these effects and reach the desired goals:

1. Provision for the addition of both sodium carbonate and sodium sulfate. This provides the presence of two precipitating agents, which provides a higher chance for the precipitation process to proceed freely.
2. Provision for dosing sodium hydroxide in order to adjust the pH to the optimum value for the precipitation reactions.
3. Addition of suitable coagulant and flocculent in two points of the plant to enhance the precipitation and ease the physical separation of the formed slurry. Provision of using a second type of coagulant is also included in the design.
4. Calcium sulfate solid is added in a very small quantity to the flocculation tank in order to provide seeding for the precipitation reaction to proceed faster
5. A long residence time after the addition of the precipitating agents is taken into consideration through the inclusion of large settling tanks
6. The settling tanks are insulated and provided with immersion heaters to decrease the supersaturation of the formed sparingly soluble salts.

ALLIED WATER INTEGRATION LTD
#48 - 5335 6 STREET N.E.
CALGARY, AB CANADA T2K 5Y4
OFFICE 403.295.0055
FAX 403.274.5829
ADMIN FAX 403.295.9104

7. The jar test indicated that barium can be removed almost completely and about 70% of the strontium value was removed. This means that 150 mg/l strontium in the feed water can be reduced to less than 50 mg/l. Also the strontium removal can be optimised in the real plant with adjustment of the chemicals dosing and the pH.

# 7 Process Description

Please refer to process flow diagram (PFD) included in Appendix B for the preceding dprocess description.

## 7.1 Chemical Reactions and Flocculation

Raw feed water is sent from the existing facility to two flash mix reaction tanks through a static mixer. Effluent from the 1st tank overflows to the 2nd tank. The tank size is up to 200 L and provides about 20 seconds retention time. The tank is equipped with a variable speed mixer geared to induce flash-type mixing. A sodium carbonate solution and sodium sulfate solution are dosed to these tanks. A sodium hydroxide is also dosed to these tanks in order to perform the precipitation reaction at the desired pH value. Water overflows to a third flash mixing tank of the same size as the 2 reaction tanks. This tank is also equipped with a variable speed mixer geared to induce flash-type mixing and coagulant is dosed into this tank. Water overflows to a flocculation tank where polyelectrolyte is added. The flocculation tank size is up to 4 m3, which provides up to 7 minutes retention time. The tank is equipped with a slow running mixer geared for flocculation mixing to enhance the coagulation and flocculation process whilst not breaking the formed flocs.

## 7.2 Settling and Clarification

The effluent is fed by gravity from the flocculation tank to a coned bottom inclined plate clarifier. The supernatant is pumped to two external 400BBL tanks and gravity-fed back to a dissolved air flotation unit (DAF) inside the plant. Emulsion breaker is dosed into the DAF to break any emulsified hydrocarbons so that it can be effectively attach to the air bubbles and rise to the skimming layer. The slurry is collected at the bottom of the clarifier by a slurry pump and pumped to a slurry collection tank.

As mentioned previously, the clarifier and the external tanks can be swopped in the process flow to increase the retention time before the fluid enters the clarifier. This adds versatility to the treatment process.

## 7.3 Dissolved Air Flotation

The DAF is selected from Pan America Environmental, model DAF-85. The DAF is equipped with skimmer rake at the top for collection of the skimmings. It is also equipped with a slurry collection auger at the bottom. A recirculation pump circulates a 50% fraction of the clear effluent and sucks air into it forming an air-supersaturated solution. At atmospheric pressure found in the separation zone, air is released from the supersaturated solution in the form of small bubbles. These air bubbles attach to the suspended solids and rise to the top skimmings layer. Any heavy solids settle to the bottom. Details of the DAF specs by manufacturer are included in Appendix C.

## 7.4 Media Filters

The clear water from the DAF is fed by the filter feed pump to the media filters where the remaining turbidity and solids are removed. Dosing points of coagulant and flocculent are plumbed into the media filter feed line. Further coagulant and or flocculent can be dosed into this stream if required for optimum filter performance.

ALLIED WATER INTEGRATION LTD
#48 - 5335 6 STREET N.E.
CALGARY, AB CANADA T2K 5Y4
OFFICE 403.295.0055
FAX 403.274.5829
ADMIN FAX 403.295.9104

The two media filter vessels are constructed of FRP and will run in parallel. Each media filter has an internal diameter of 54" (1.372m). This provides surface loading of roughly 3.14 gpm/ft$^2$ (7.7 m/h) during normal operation. When one filter is being backwashed, the other filter has a surface load of roughly 6.28 gpm/ft$^2$ (15.4 m/h), which is still with-in acceptable norms of 3-7 gpm/ft$^2$. The bottom layer shall consist of 30" (76cm) bed of sand and a top anthracite layer of roughly 14" (35cm) thick. Media can be changed to obtain the best solids and turbidity removal according to actual water characteristics encountered at site. Sand and anthracite are the starting selection based on industry experience with their performance.

The media filters backwash pump is included in the plant supply but will be shipped loose to be installed near the treated water storage tanks and connected to a branch from an existing suction line from these tanks. The backwash pump shall be controlled by the PLC included in the treatment plant.

## 7.5 Cartridge Filters

The final polishing step includes cartridge filters with 5 micron nominal bore size. This provides almost complete removal of any particles 10 microns or larger. The cartridge filters are preliminary selected from Parker and is model 4CSF6-4-3F. Two filters shall be installed, one duty, and one standby. Different types of cartridges can be used inside these filters and oil absorbing cartridges shall be used as a first choice in the plant.

All tanks and atmospheric equipment are covered with vent lines directed to client's vapor handling and treatment system. The vent lines will experience a slight negative pressure created by a fan within the plant. Volatile organic compounds (VOC) are sucked through these vent lines and are directed to clients system.

## 7.6 Chemicals Used

Chemicals used within the plant are:

- Sodium hypochlorite
- Sodium hydroxide
- Sodium sulfate
- Sodium carbonate
- Poly aluminum chloride (PACl)
- Aluminum Sulfate (Alum)
- Anionic polyelectrolyte
- Emulsion breaker (The type used by Secure in their facility)
- Sulfuric acid

Please refer to Appendix D for the MSDS of these chemicals.

## 7.7 Instrumentation and Control

- Flow meters are included for the feed water and final effluent from the treatment plant with feedback provided to the PLC. Chemical pumps are start and stopped when the measured feed water value reaches or exceeds a preset point.
- Low-low, low, high, high-high level switches are included in all tanks. These switches provide feedback to the PLC for indication purpose and alarms for the low-low and high-high signals. Low-low signals also stop pumps from drawing water from applicable tanks. High-high signals close automatic valves or stops feed pumps to applicable tanks.
- The pH of the feed water to the first 200 L reaction tank is measured and feedback is provided to the PLC for control of the sodium hydroxide dosing pumps. This allows to control the alkali or acid dosing based on the required pH set point on the PLC.

ALLIED WATER INTEGRATION LTD
#48 - 5335 6 STREET N.E.
CALGARY, AB CANADA T2K 5Y4
OFFICE 403.295.0055
FAX 403.274.5829
ADMIN FAX 403.295.9104

- The pH of the effluent water from the second 200 L reaction tank is measured and provides feedback for PLC for control of the sulfuric acid dosing pumps. This controls the alkali or acid dosing based on the required pH set point value on the PLC.
- The pH of the feed water to the cartridge filters is measured and feedback is provided to the PLC to control the pertinent sodium hydroxide and sulfuric acid dosing pumps. This allows control of the alkali or acid dosing based on the required final neutral pH set point value on the PLC.
- The differential pressure over the media filters is measured and feedback is provided to the PLC, which compares the value to a set point. If the set point is reached or exceeded, a backwash cycle is initiated and the standby filter is introduced into service. The changeover of filters service is programmed to start either by differential pressure or set time.
- The differential pressure over the cartridge filters is measured and feedback is provided to the PLC, which compares the value to a set point. An alarm is initiated when this differential pressure exceeds the set point. The operator then needs to change operation to the standby cartridge filter and change the cartridges in the loaded filter.
- Turbidity of the final effluent from the treatment plant is measured and feedback provided to the PLC. An alarm is initiated when the measured value reaches or exceeds the preset point, at which time the operator may investigate the cause of the high turbidity and forcibly start the running media filter's backwash cycle. The backwash cycle will then proceed fully automatically.
- The slurry colelction tank is operated by a level switch in the tank.
- A high level switch from the client's treated water storage tanks provides feedback to the PLC. The PLC activates an alarm when the high level switch is activated, after which the operator should stop the plant and manually divert the feed water to another destination within the client's facility.

## 7.8 Major Equipment List

Based on the previous process and equipment description, the following is a list of the major equipment included in the plant.

| Serial # | Equipment | Tag | Quantity |
|---|---|---|---|
| 1 | First Reaction Tank | TK-1100 | 1 x 100% |
| 2 | Second Reaction Tank | TK-1200 | 1 x 100% |
| 3 | Third Reaction Tank | TK-1300 | 1 x 100% |
| 4 | Flocculation Tank | TK-1400 | 1 x 100% |
| 5 | Inclined Plate Clarifier | CL-2100 | 1 x 100% |
| 6 | Dissolved Air Flotation Package | DAF-4100 | 1 x 100% |
| 7 | Filter Feed Pump | P-4200 | 1 x 100% |
| 8 | Media Filters | MMF-5100-1/2 | 2 x 70% |
| 9 | Media Filter Backwash Pump | P-5600 | 1 x 100% |
| 10 | Cartridge Filters | CF-5200-1/2 | 2 x 100% |
| 11 | Slurry Pump | P-7600 | 1 x 100% |

## 7.9 Chemical Systems

| Serial # | Equipment | Tag | Quantity |
|---|---|---|---|
| 1 | Sulfuric Acid Tank | TK-9600 | 1 x 100% |
| 2 | Sulfuric Acid Pump (Feed Water) | P-9600-1/2 | 1 x 100% |
| 3 | Caustic Tank | TK-9700 | 1 x 100% |
| 4 | Caustic Pump (Feed Water) | P-9700-1/2 | 1 x 100% |
| 5 | Sodium Carbonate Tank | TK-9100 | 1 x 100% |

ALLIED WATER INTEGRATION LTD
#48 - 5335 6 STREET N.E.
CALGARY, AB CANADA T2K 5Y4
OFFICE 403.295.0055
FAX 403.274.5829
ADMIN FAX 403.295.9104

| | | | |
|---|---|---|---|
| 6 | Sodium Carbonate Pump | P-9100 | 1 x 100% |
| 7 | Sodium Sulfate Tank | TK-9500 | 1 x 100% |
| 8 | Sodium Sulfate Pump | P-9500 | 1 x 100% |
| 9 | Coagulant Tank | TK-9200 | 1 x 100% |
| 10 | Coagulant Pump | P-9200-1/2 | 1 x 100% |
| 11 | Flocculent Tank | TK-9300 | 1 x 100% |
| 12 | Flocculent Pump | P-9300-1/2 | 1 x 100% |
| 13 | Sodium Hypochlorite Tank | TK-9400 | 1 x 100% |
| 14 | Filtration Sodium hypochlorite Pump | P-9400-1 | 1 x 100% |
| 15 | Feed water Sodium hypochlorite Pump | P-9400-2 | 1 x 100% |
| 16 | Additional Chemical Pump | P-9000 | 1 x 100% |
| 18 | Additional Chemical Pump | P-9800 | 1 x 100% |
| 20 | Additional Chemical Pump | P-9900 | 1 x 100% |

### 7.10 Major Electrical Components

| Serial # | Equipment | Tag | Quantity |
|---|---|---|---|
| 1 | Programmable Logic Controller (PLC) | | 1 x 100% |
| 2 | Human Machine Interface (HMI) | | 1 x 100% |
| 3 | MCC classified as Class I, Div 2, Group C and D | | 1 x 100% |

### 7.11 Major Structural Components

The plant will be housed in a single 65ft long skidded and insulated building. The building is 11ft wide and 11 ½ft tall and will be equiped with an HVAC system. Removal of VOC gasses from the water treatment process is also included. Insulation is by means of 3in removable wall panels. The roof and floor (underneath) is insulated with spray-foam to 3in as well. Access to service the inclined plate clarifier will be provided through a movable opening in the roof. Access for chemical stocking will be provided through a roll-up door in the vacinity of the chemical storage tanks. Further access to the plant will be provided through two doors on opposite ends of the skid. Access doors will be lighted from above.

## 8 Streams and Wastes Entering and Leaving the Plant

- The raw feed water is pre-treated by settling and skimming (sweet water).
- Treated water shall be discharged to existing storage tanks for mixing and reuse by client.
- Separated skimming mixture in the DAF will be discharged outside the treatment plant. This stream shall be mixed with other similar streams and treated within the current facility by client.
- Slurry from the slurry collection tank shall be discharged from the treatment plant for treatment/hauling/disposal by client.
- Media filter backwash wastewater shall be discharged from the treatment plant for treatment/hauling/disposal by client.
- Volatile organic hydrocarbons and off gasses shall be connected to clients vapor treatment system. Added equipment may be required, i.e. a scrubber, and fall outside the current scope of supply.

### 8.1 Details of the Off-Gasses

The following table summarises the hydrocarbon analysis results of the samples provided by Secure and performed by ALS. Only a portion of the mass flow rate will be transferred to the gas phase, depending on the volatility of each component and the air flow rate, temperature,

ALLIED WATER INTEGRATION LTD
#48 - 5335 6 STREET N.E.
CALGARY, AB CANADA T2K 5Y4
OFFICE 403.295.0055
FAX 403.274.5829
ADMIN FAX 403.295.9104

differential pressure and other process factors. However hydrocarbons in the gas phase will not exceed the maximum mass flow rates if all the quantities are transferred to the gas phase.

| CONSTITUENT | Unit | TEST | | | | | | | | | | | | | MAX | AVE |
|---|---|---|---|---|---|---|---|---|---|---|---|---|---|---|---|---|
| Work Order | | 1169601 | 1171169 | 1172215 | 1174634 | 1175371 | 1178405 | 1181146 | 1183365 | 1184975 | 1186426 | | | | MASS F.R. | MASS F.R. |
| Date | | 28/06/12 | 01/07/12 | 04/07/12 | 06/07/12 | 10/07/12 | 13/07/12 | 19/07/12 | 23/07/12 | 26/07/12 | 31/07/12 | MIN | MAX | AVE | kg/day (1) | kg/day (1) |
| **BTEX** | | | | | | | | | | | | | | | | |
| Benzene | µg/L | 9700 | 17000 | 21000 | 31000 | 27000 | 25000 | 21000 | 22000 | 32000 | 31000 | 9700 | 32000 | 23670 | 24.0 | 17.8 |
| Toluene | µg/L | 10000 | 20000 | 27000 | 42000 | 50000 | 31000 | 37000 | 29000 | 170000 | 58000 | 10000 | 170000 | 47400 | 127.5 | 35.6 |
| Ethylbenzene | µg/L | 360 | 740 | 1100 | 2900 | 4500 | 1000 | 2300 | 690 | 25000 | 5100 | 360 | 25000 | 4369 | 18.8 | 3.3 |
| Xylenes (Total | µg/L | 2800 | 6400 | 9200 | 25000 | 36000 | 8600 | 22000 | 5500 | 260000 | 60000 | 2800 | 260000 | 43550 | 195.0 | 32.7 |
| Styrene | µg/L | <50000 | <50000 | <5000 | <300000 | <300000 | <5000 | <300000 | <5000 | <300000 | <500000 | x | x | | x | x |
| **VHw6-10** | µg/L | 50000 | 70000 | 97000 | 380000 | 420000 | 72000 | 240000 | 71000 | 3800000 | 1100000 | 50000 | 3800000 | 630000 | **2850.0** | **472.5** |
| **VPHw** | µg/L | 28000 | 23000 | 39000 | 280000 | 300000 | 6600 | 160000 | 14000 | 3300000 | 940000 | 6600 | 3300000 | 509060 | **2475.0** | **381.8** |
| **EPH (C10-C19) and EPH (C19-C32)** | | | | | | | | | | | | | | | | |
| EPH-10-19 | µg/L | <5000 | 42600 | 146000 | 134000 | 263000 | 132000 | 305000 | 14500 | 324000 | 109000 | 14500 | 324000 | 163344.4 | 243.0 | 122.5 |
| EPH19-32 | µg/L | <5000 | 28200 | 82500 | 41900 | 124000 | 52200 | 74200 | 7000 | 123000 | 48000 | 7000 | 124000 | 64555.56 | 93.0 | 48.4 |
| **LEPHs and HEPHs** | | | | | | | | | | | | | | | | |
| LEPHw | µg/L | 1330 | 42500 | 146000 | 134000 | 263000 | 132000 | 304000 | 14500 | 324000 | 109000 | 1330 | 324000 | 147033 | 243.0 | 110.3 |
| HEPHw | µg/L | 740 | 28200 | 82500 | 41900 | 124000 | 52200 | 74200 | 6990 | 123000 | 47500 | 740 | 124000 | 58123 | 93.0 | 43.6 |
| **PAHs** | | | | | | | | | | | | | | | | |
| Acenaphthene | µg/L | | | | | | | | | 6.2 | | 6.2 | 6.2 | 6.2 | 0.005 | 0.005 |
| Acridine | µg/L | 15.2 | 2.39 | 21.9 | 16.2 | 23.8 | 12.5 | 18.9 | 1.4 | 22.6 | | 1.4 | 23.8 | 15.0 | 0.02 | 0.01 |
| Fluorene | | | 4.06 | 19.4 | | 43.3 | 23.1 | 46.5 | 3 | 41.7 | 21.4 | 3 | 46.5 | 25.3 | 0.03 | 0.02 |
| 2-Methylnaphthalene | µg/L | 307 | 52.5 | 241 | 315 | 500 | 464 | 747 | 56.2 | 315 | 304 | 52.5 | 747 | 330.2 | 0.56 | 0.25 |
| Naphthalene | µg/L | 156 | 37.6 | 106 | 180 | 242 | 248 | 357 | 37.8 | 108 | 143 | 37.6 | 357 | 161.5 | 0.27 | 0.12 |
| Phenanthrene | µg/L | 38.7 | 7.21 | 45.8 | 31.7 | 70.8 | 42.6 | 65.3 | 3.6 | 55.5 | 26.9 | 3.6 | 70.8 | 38.8 | 0.05 | 0.03 |
| Pyrene | µg/L | 2.1 | | | | | | | | | 1.67 | 1.67 | 2.1 | 1.9 | 0.002 | 0.001 |
| Quinoline | µg/L | | 1.26 | | | | | | | | | 1.26 | 1.26 | 1.3 | 0.001 | 0.001 |
| **Total PAHs** | | | | | | | | | | | | | | | **0.941** | **0.435** |

**Notes:**

- (1): Mass flow rate is based on a raw feed water flow rate of 750 $m^3$/day
- Styrene detection limit was high and variable because of interferences and the need to dilute the sample in the lab.
- ALS advised that they can perform a separate styrene test using the oil phase only in order to have a styrene result with a lower detection limit.
- All hydrocarbon results are from the mixture of the oil and water, i.e. the results represent the hydrocarbon concentration as an average in both oil and water phases.
- Blank or <value means less than the detection limit

## 8.2 Details of the Slurry

Upon submission of this document, analysis results of the slurries collected during jar testing was not available. The results will be forwarded when received.

ALLIED WATER INTEGRATION LTD
#48 - 5335 6 STREET N.E.
CALGARY, AB CANADA T2K 5Y4
OFFICE 403.295.0055
FAX 403.274.5829
ADMIN FAX 403.295.9104

## Appendix A: Jar Test Analysis Results

Please refer to the following two pages for analysis results from the jar testing.

ALLIED WATER INTEGRATION
PEOPLE + TECHNOLOGY = SOLUTIONS

ALLIED WATER INTEGRATION LTD
#48 - 5335 6 STREET N.E.
CALGARY, AB CANADA T2K 5Y4
OFFICE 403.295.0055
FAX 403.274.5829
ADMIN FAX 403.295.9104

| Sample No | Unit | RAW WATER | REQUIRED | 22 | 23r | 31r | 11 | 34 | 12 | 15 | 16 | 17 | 23 | 24 | 26 | 27 | 31 | 32 | 36 | 37 | 38 | 41 | 42 | 44 | 46 | 47 |
|---|---|---|---|---|---|---|---|---|---|---|---|---|---|---|---|---|---|---|---|---|---|---|---|---|---|---|
| **Start at 200 rpm** | | | | | | | | | | | | | | | | | | | | | | | | | | |
| H2SO4 (10%) | ml | | | | | | 10 | | 20 | | | | | | | | | | | | | | | | | |
| pH | Unitless | | | | | | 1.23 | | 1 | | | | | | | | | | | | | | | | | |
| NaOCl (1%), ml | ml | | | | | | | | | | | | 0.5 | | | 1 | | | | | | | | | | |
| | | | | | | | | | | | | | | | | | | | | | | | | | | |
| NaHCO3 (5%), ml | ml | | | | | | | | | 5 | 10 | 1 | 10 | 5 | 30 | 5 | | | 50 | | 0.5 | | | 5 | | |
| | | | | | | | | | | | | | | | | | | | | | | | | | | |
| Sodium phosphate, ml | ml | | | | | | | | | | | | | | | | | | | 1 | | | | | 5 | 3 |
| Na(OH) | | | | 10 | 10 | 10 | 10 | 10 | 16 | | | | | | | | | | | | | | | | | |
| pH | Unitless | | | 11.4 | 11.4 | 11.34 | 9 | 11.34 | 8.1 | 10.7 | 10.5 | 10.5 | 10 | 10 | 10.5 | 10.5 | | 10 | 10.5 | 10.5 | 10.5 | 9.5 | 10.5 | 10 | 10.5 | 10.5 |
| Ca(OH)2 to reach pH | Unitless | | | | | | | | | | | | | | | | 9.5 | | | | | | | | | |
| NaHCO3 | | | | | | | | | | | | | | | | | | | | | | | | | | |
| NaSO4 (10%) | ml | | | 5 | 10 | 5 | | 10 | | | | | | | | | | | | | | | | | | |
| pH | Unitless | | | 11.47 | 11.5 | 11.38 | | 11.38 | | | | | | | | | | | | | | | | | | |
| H2SO4 (10%) | ml | | | 11.7 | 11.5 | 12 | | | 12 | | | | | | | | | | | | | | | | | |
| pH | Unitless | | | 7.5 | 7.5 | 7.5 | | | 7.5 | | | | | | | | | | | | | | | | | |
| NaHCO3 (5%) | ml | | | 5 | 5 | 5 | 5 | 5 | 5 | | | | | | | | | | | | | | | | | |
| PACl | ml | | | 5 | 5 | 2.5 | 5 | 2.5 | 5 | 100 | 100 | 100 | 100 | 100 | 100 | 100 | 150 | 100 | 100 | 100 | 100 | 150 | 100 | | 100 | 100 |
| Alum (Al2(SO4)3; (10%) | ml | | | | | | | | | | | | | | | | | | | | | | | 5 | | |
| pH | Unitless | | | 7.14 | 7.13 | 7.14 | 8.5 | 7.14 | 7.6 | | | | | | | | | | | | | | | | | |
| H2SO4 (10%) | ml | | | | | | | | | | | | | | | | | | | | | | | | | |
| pH | Unitless | | | | | | | | | | | | | | | | | | | | | | | | | |
| **Flash mixing for 10 s at 200 rpm** | | | | | | | | | | | | | | | | | | | | | | | | | | |
| PAM (Anionic) | ml | | | 4 | 4 | 4 | 4 | 4 | 4 | 75 | 75 | 75 | 75 | 50 | 75 | 75 | 75 | 75 | 75 | 75 | 75 | 75 | 75 | | 75 | 75 |
| **Flocculate for 10 minutes at 20 rpm** | | | | | | | | | | | | | | | | AIR | | | | | | | | | | |
| Emulsion breaker, neat, ml | | | | | | | | | | | | | | 0.1 | | | | | | | | | | 0.1 | | |
| Slurry (%) after 5 minutes | | | | 10% | 15% | 10% | 10% | 10% | 10% | | | | | | | | | | | | | | | | | |
| Slurry (%) after 10 minutes | | | | 10% | 10% | 10% | 10% | 10% | 10% | 45% | 40% | 30% | | 35% | 55% | 45% | | 35-40% | 75% | 40% | 45% | | 35-40% | | 65% | 50% |
| Slurry (%) after 15 minutes | | | | | | | | | | 45% | 35% | 30% | | 35% | 50% | 45% | | | 65% | 40% | 43% | | | | 60% | 50% |
| | | | | | | | | | | | | | | | | | | | | | | | | | | |
| | | | | | | | | | | | | | | | | | | | | | | | | | | |
| Slurry characteristics | | | | | | | | | | | | | | | | | | | | | | | | | | |
| Water layer | | | | | | | | | | | | | | | | | | | | | | | | | | |
| **ANALYSES (Total constituent, mg/l)** | | | | | | | | | | | | | | | | | | | | | | | | | | |
| **Sample No.** | | | | 22 | 23r | 31r | 11 | 34 | 12 | 15 | 16 | 17 | 23 | 24 | 26 | 27 | 31 | 32 | 36 | 37 | 38 | 41 | 42 | 44 | 46 | 47 |
| Total Barium (Ba) | mg/l | 2400 | 50 | 0.57 | 1.6 | 0.98 | 0.82 | 3.2 | 0.16 | 2000 | 1800 | 2000 | 2000 | 2000 | 2000 | 2000 | 2200 | 1900 | 840 | 2000 | 1900 | 1900 | 1900 | 1900 | 1700 | 1800 |
| Total Strontium (Sr) | mg/l | 720 | 50 | 320 | 260 | 260 | 330 | 220 | 230 | 620 | 590 | 590 | 660 | 660 | 610 | 500 | 660 | 590 | 360 | 600 | 550 | 630 | 560 | 620 | 560 | 580 |
| Total Calcium (Ca) | mg/l | 3100 | 5000 | 2400 | 2300 | 2300 | 2400 | 2400 | 2300 | 570 | 1800 | 180 | 2500 | 2200 | 410 | 1500 | 4100 | 2300 | 690 | 680 | 120 | 2500 | 2000 | 2100 | 1600 | 500 |
| Total Magnesium (Mg) | mg/l | 140 | 5000 | 260 | 250 | 250 | 260 | 260 | 260 | <1.0 | <10 | <10 | 0.55 | 7.8 | <1.0 | 1500 | 1.0 | 1.9 | <10 | <10 | 120 | 66 | <0.20 | 4.8 | <10 | <10 |
| Total Iron (Fe) | mg/l | 1.4 | <200 | <0.60 | <0.60 | <0.60 | <0.60 | <0.60 | 2.8 | <0.30 | <3.0 | <3.0 | 0.16 | <0.30 | <0.30 | 1500 | 0.16 | 0.13 | <3 | <3.0 | 120 | 0.13 | 0.088 | <0.30 | <3 | <3 |
| Total Manganese (Mn) | mg/l | 1.2 | | 0.43 | 0.51 | 0.65 | 0.44 | 0.93 | 1.1 | <0.020 | <0.20 | <0.20 | <0.0040 | <0.020 | <0.020 | <0.20 | <0.0040 | <0.0040 | <0.2 | <0.20 | <0.20 | <0.0040 | <0.0040 | <0.020 | <0.20 | <0.20 |
| Total Potassium (K) | mg/l | | | 1200 | 1200 | 1100 | 1200 | 1200 | 1200 | 1200 | 1400 | 1500 | 1400 | 1300 | 1300 | 1400 | 1400 | 1300 | 1400 | 1400 | 1500 | 1300 | 1200 | 1200 | 1500 | 1600 |
| Total Sodium (Na) | mg/l | 29000 | | 31000 | 30000 | 30000 | 31000 | 30000 | 33000 | 38000 | 34000 | 40000 | 32000 | 34000 | 39000 | 32000 | 29000 | 29000 | 32000 | 37000 | 41000 | 30000 | 29000 | 34000 | 35000 | 39000 |
| pH | Unitless | 6.7 | Neutral | 7.52 | 7.50 | 7.54 | 8.05 | 7.53 | 7.54 | | 12.2 | 12.7 | 11.0 | | 12.2 | | 10.2 | 10.5 | 12.0 | 12.6 | 12.8 | 9.82 | | | 12.2 | 12.6 |
| **Anions** | | | | | | | | | | | | | | | | | | | | | | | | | | |
| Alkalinity (PP As CaCO3) | mg/l | | | <0.50 | <0.50 | <0.5 | <0.50 | <0.50 | <0.50 | | 660 | 6600 | 1100 | | 600 | | 860 | 840 | 2200 | 2500 | 7900 | 7900 | | | 600 | 2800 |
| Alkalinity (Total as CaCO3) | mg/l | | | 410 | 420 | 480 | 240 | 600 | 590 | | 1100 | 9000 | 1300 | | 1000 | | 1100 | 1100 | 2700 | 3700 | 11000 | 900 | | | 1100 | 4200 |
| Bicarbonate (HCO3) | mg/l | | | 510 | 510 | 580 | 290 | 740 | 720 | | <5.0 ( 1 | <5.0 ( 1 | <0.50 | | <5 | | <0.50 | <0.50 | <5.0 | <5.0 | <5.0 | <0.50 | | | <5.0 | <5.0 |
| Carbonate (CO3) | mg/l | | | <0.50 | <0.50 | <0.5 | <0.50 | <0.50 | <0.50 | | 490 | 2900 | 310 | | 540 | | 310 | 270 | 650 | 1400 | 3600 | 300 | | | 590 | 1700 |
| Hydroxide (OH) | mg/l | | | <0.50 | <0.50 | <0.5 | <0.50 | <0.50 | <0.50 | | 88 | 1400 | 270 | | 51 | | 210 | 210 | 56 | 460 | 1700 | 130 | | | 36 | 480 |
| Dissolved Sulfate (SO4) | mg/l | | <1000 | 2700 | 35000 | 3100 | 1700 | 3500 | 5100 | 29 | <1 | <10 | <2 | | <1 | | <2 | <2 | 3.9 | 13 | 250 | <1 | 16 | 6.6 | <1 | 15 |
| Dissolved Chloride (Cl) | mg/l | 62000 | | 55000 | 55000 | 55000 | 58000 | 56000 | 55000 | 62000 | 58000 | 61000 | 60000 | | 60000 | | 60000 | 54000 | 52000 | 56000 | 59000 | 58000 | 51000 | 59000 | 60000 | 60000 |

ALLIED WATER INTEGRATION
PEOPLE + TECHNOLOGY = SOLUTIONS

ALLIED WATER INTEGRATION LTD
#4B - 5335 6 STREET N.E.
CALGARY, AB CANADA T2K 5Y4
OFFICE 403.295.0055
FAX 403.274.5829
ADMIN FAX 403.295.9104

| Sample No | Unit | RAW WATER | REQUIRED | 261 | 262 | 41C | 42C | 43C | 44C | 51C | 52C | 53C | 54C | 61C | 62C | 63C | 64C | 71 | 72 | 73 | 74 |
|---|---|---|---|---|---|---|---|---|---|---|---|---|---|---|---|---|---|---|---|---|---|
| **Start at 200 rpm** | | | | | | | | | | | | | | | | | | | | | |
| H2SO4 (10%) | ml | | | | | | | | | | | | | | | | | | | | |
| pH | Unitless | | | | | | | | | | | | | | | | | | | | |
| NaOCl (1%), ml | ml | | | | 9 | | | | | | | | | | | | | | | | |
| | | | | | | | | | | | | | | | | | | | | | |
| NaHCO3 (5%), ml | ml | | | 5 | 5 | | | | | | | | | | | | | | | | |
| | | | | | | | | | | | | | | | | | | | | | |
| Sodium phosphate, ml | ml | | | | | | | | | | | | | | | | | | | | |
| Na(OH) | | | | | | 2.6 | 2.6 | 2.6 | 2.6 | 2.6 | 2.6 | 2.6 | 2.6 | 2.6 | 2.6 | 6 | 9 | 4.5 | 6.8 | 7.8 | **8** |
| pH | Unitless | | | 10.5 | 10.5 | 9.5 | 9.5 | 9.5 | 9.5 | 9.5 | 9.5 | 9.5 | 9.5 | 9.5 | 9.5 | | 11.2 | 10 | 11 | 11 | **11** |
| Ca(OH)2 to reach pH | Unitless | | | | | | | | | | | | | | | | | | | | |
| NaHCO3 | | | | | | | | | | | | | | | | | | 5 | 5 | 5 | **5** |
| NaSO4 (10%) | ml | | | | | 5 | 25 | 5 | 25 | | | | | 50 | 5 | | | | | | |
| pH | Unitless | | | | | 9.6 | 9.5 | 9.5 | 9.5 | | | | | 9.5 | 9.5 | | | | | | |
| H2SO4 (10%) | ml | | | | | | | | | | | | | | | | | 5.4 | 8.6 | 10 | **10** |
| pH | Unitless | | | | | | | | | | | | | | | | | | 7.4 | 7.1 | **7.4** |
| NaHCO3 (5%) | ml | | | | | 5 | 5 | 5 | 5 | 5 | 5 | 5 | 5 | 5 | 5 | 5 | 5 | | | | |
| PACl | ml | | | 100 | 100 | 100 | 100 | 100 | 100 | 100 | 100 | 100 | 100 | 100 | 100 | 100 | 100 | 100 | 100 | 100 | **100** |
| Alum (Al2(SO4)3, (10%) | ml | | | | | | | | | 25 | 12.5 | 12.5 | 2.5 | | | 25 | 25 | | | | |
| pH | Unitless | | | | | | | | | 4.3 | 8 | 8 | 9.2 | | | 8.5 | 9 | | | | |
| H2SO4 (10%) | ml | | | | | | | | 3 | | | | | 2.7 | 2.7 | 1 | 2.8 | | | | |
| pH | Unitless | | | | | | | | | | | | | 7.5 | 7.5 | 7.5 | 7.5 | | 7.5 | | |
| **Flash mixing for 10 s at 200 rpm** | | | | | | | | | | | | | | | | | | | | | |
| PAM (Anionic) | ml | | | 75 | 75 | 75 | 75 | 75 | 75 | 75 | 75 | 75 | 75 | 75 | 75 | 75 | 75 | 75 | 75 | 75 | **75** |
| **Flocculate for 10 minutes at 20 rpm** | | | | | | | | | | | | | | | | | | | | | |
| Emulsion breaker, neat, ml | | | | | | | | | | | | | | | | | | | | | |
| Slurry (%) after 5 minutes | | | | | | | | | | | | | | | | | | | | | |
| Slurry (%) after 10 minutes | | | | 40% | 40% | 8% | 8% | 20% | 8% | 60% | 25% | 25% | 23% | 10% | 10% | 40% | 55% | 8% | 8% | 8% | **8%** |
| Slurry (%) after 15 minutes | | | | | | 8% | 8% | 15% | 8% | 40% | 20% | 20% | 20% | 20% | 10% | 40% | 50% | | | | |
| | | | | | | 8% | 8% | 10% | 8% | 25% | 20% | 20% | 205 | 20% | | | | | | | |
| | | | | | | | | | | | | | | | | | | | | | |
| Slurry characteristics | | | | | | | | | | | | | | | | | | Very dense | Very dense | Very dense | Very dense |
| Water layer | | | | | | More hazy | hazy | Clear | Much more hazy | Hazy-Light | Hazy - Dark | Clear-More dark | Clear Much more dark | More hazy | Hazy | More Clear | Clear | Clear | Hazy | Hzy | **Little hazy** |
| **ANALYSES (Total constituent, mg/l)** | | | | | | | | | | | | | | | | | | | | | |
| **Sample No.** | | | | 261 | 262 | 41C | 42C | 43C | 44C | 51C | 52C | 53C | 54C | 61C | 62C | 63C | 64C | 71 | 72 | 73 | 74 |
| Total Barium (Ba) | mg/l | 2400 | 50 | 1800 | 1400 | 3.0 | 6.7 | 1200 | 3.5 | 110 | 3.2 | 750 | 1700 ( 1 | **2.7** | 34 | 1000 | 3.1 | 6.7 | 2 | 1.8 | **1.8** |
| Total Strontium (Sr) | mg/l | 720 | 50 | 570 | 460 | 230 | 270 | 530 | 270 | 480 | 440 | 540 | 600 | **180** | 500 | 570 | 480 | 440 | 350 | 360 | **310** |
| Total Calcium (Ca) | mg/l | 3100 | 5000 | 450 | 400 | 2100 | 2200 | 2500 | 2700 | 2900 | 2600 | 2800 | 2700 | **2600** | 2900 | 3000 | 2800 | 2600 | 2600 | 2600 | **2500** |
| Total Magnesium (Mg) | mg/l | 140 | 5000 | <0.0040 | <0.0040 | 270 | 280 | 290 | 300 | 300 | 240 | 300 | 300 | **290** | 310 | 320 | 190 | 290 | 290 | 290 | **290** |
| Total Iron (Fe) | mg/l | 1.4 | <200 | <0.060 | <0.060 | <15 | <15 | <15 | <15 | <15 | <15 | <15 | <15 | **<15** | <15 | <15 | <15 | <3.0 | <3.0 | <3.0 | **<3.0** |
| Total Manganese (Mn) | mg/l | 1.2 | | <0.0040 | <0.0040 | <1.0 | <1.0 | <1.0 | 1.4 | 1.9 | <1.0 | 1.1 | <1.0 | **1.2** | 1.1 | 1.1 | <1.0 | 0.85 | 0.74 | 0.97 | **0.59** |
| Total Potassium (K) | mg/l | | | | | 1200 | 1200 | 1300 | 1300 | 1300 | 1300 | 1300 | 1300 | **1200** | 1300 | 1400 | 1400 | 1300 | 1300 | 1300 | **1300** |
| Total Sodium (Na) | mg/l | 29000 | | 39000 | 35000 | 29000 | 28000 | 29000 | 27000 | 26000 | 27000 | 26000 | 28000 | **28000** | 27000 | 28000 | 29000 | 28000 | 28000 | 28000 | **28000** |
| pH | Unitless | 6.7 | Neutral | 12.4 | 12.3 | 9.00 | 8.99 | 8.97 | 7.45 | 6.45 | 7.48 | 7.30 | 8.64 | **7.47** | 7.10 | 7.54 | 7.65 | 7.28 | 7.26 | 7.22 | **7.29** |
| **Anions** | | | | | | | | | | | | | | | | | | | | | |
| Alkalinity (PP As CaCO3) | mg/l | | | 1500 | 920 | 320 | 350 | 350 | <0.50 | <0.50 | <0.50 | <0.50 | 160 | **<0.50** | <0.50 | <0.50 | <0.50 | <0.50 | <0.50 | <0.50 | **<0.50** |
| Alkalinity (Total as CaCO3) | mg/l | | | 2300 | 1700 | 610 | 640 | 680 | 430 | 130 | 340 | 330 | 560 | **430** | 290 | 310 | 230 | 370 | 380 | 420 | **340** |
| Bicarbonate (HCO3) | mg/l | | | <5.0 | <5 | <0.50 | <0.50 | <0.50 | 530 | 160 | 420 | 400 | 310 | **520** | 350 | 370 | 280 | 450 | 460 | 510 | **410** |
| Carbonate (CO3) | mg/l | | | 920 | 930 | 340 | 350 | 390 | <0.50 | <0.50 | <0.50 | <0.50 | 190 | **<0.50** | <0.50 | <0.50 | <0.50 | <0.5 | <0.5 | <0.5 | **<0.5** |
| Hydroxide (OH) | mg/l | | | 260 | 51 | 12 | 19 | 9.2 | <0.50 | <0.50 | <0.50 | <0.50 | <0.50 | **<0.50** | <0.50 | <0.50 | <0.50 | <0.5 | <0.5 | <0.5 | **<0.5** |
| Dissolved Sulfate (SO4) | mg/l | | <1000 | 2.7 | 8.9 | 3800 | 840 | 14 | 1900 | <1.0 | 2.6 | 1.3 | 7.9 | **4900** | 26 | 300 | 630 | 220 | 1100 | 1700 | **1900** |
| Dissolved Chloride (Cl) | mg/l | 62000 | | 60000 | 50000 | 51000 | 57000 | 57000 | 57000 | 52000 | 55000 | 53000 | 57000 | **53000** | 58000 | 55000 | 55000 | 59000 | 60000 | 59000 | **60000** |

ALLIED WATER INTEGRATION LTD
#48 - 5335 6 STREET N.E.
CALGARY, AB CANADA T2K 5Y4
OFFICE 403.295.0055
FAX 403.274.5829
ADMIN FAX 403.295.9104

## Appendix B: Process Flow Diagram

Please refer to the following page for a 11in x 7in copy of the PFD, drawing number SK-0000016.

| | | | | | | | | | | | | | |
|---|---|---|---|---|---|---|---|---|---|---|---|---|---|
| SM–1400 STATIC MIXER | TK–1100/1200/1300 FLASH MIXING TANK | TK–1400 FLOCCULATION TANK | IPC–2100 INCLINED PLATE CLARIFIER | P–2200 REACTION TANK FEED PUMP | TK–3100/3200 REACTION TANK | DAF–4100 DAF | P–4300 DAF RECYCLE PUMP | P–4200 FILTER FEED PUMP | MMF–5100–1/2 MULTIMEDIA FILTER | CF–5200–1/2 CARTRIDGE FILTER | TK–6100 TREATED WATER TANK (CLIENT SCOPE) | P–5600 MMF BACKWASH PUMP | |
| F–8300 VOC FAN | P–9700–1/2 SODIUM HYDROXIDE PUMP | P–9500 SODIUM SULPHATE PUMP | P–9600–1/2 SULPHURIC ACID PUMP | P–9100 SODIUM CARBONATE PUMP | P–9200–1/2 PACI PUMP | P–9300–1/2 PAM PUMP | P–9800/9900/9000 ADDITIONAL CHEMICAL PUMP | P–9400–1/2 SODIUM HYPOCHLORITE PUMP | TK–7100 SKIMMINGS TANK | P–7200 SKIMMINGS PUMP | TK–8100 SLURRY TANK | P–8200 SLURRY PUMP | |

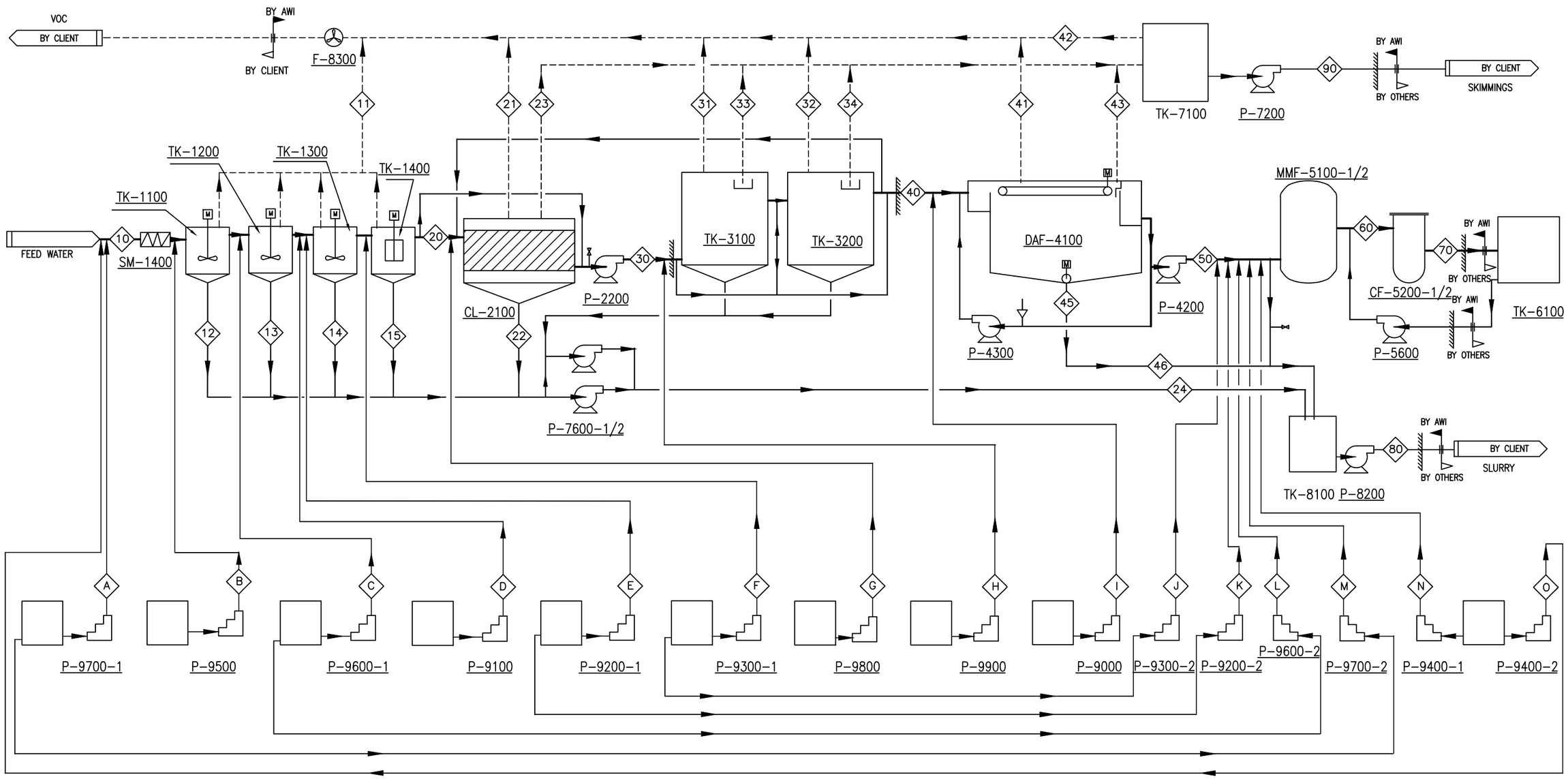


| REV. | REVISION | DATE | BY | QC | ENG | REV | APR |
|---|---|---|---|---|---|---|---|
| 0 | | 10/06/13 | CY | CY | KM | KM | RR |

STAMP

PROPRIETARY STATEMENT

THIS DOCUMENT, AND THE INFORMATION CONTAINED HEREIN ARE PROPERTY OF AWI LTD AND SHALL NOT BE DISCLOSED WITHOUT PRIOR WRITTEN CONSENT OF SAID COMPANY. THIS DOCUMENT IS TO BE USED EXCLUSIVELY FOR THE PURPOSE EXPRESSLY AUTHORIZED BY AWI LTD AND ITS AFFILIATES AND NOT FOR USE FOR ANY OTHER PURPOSE. NEITHER THIS DOCUMENT NOR ANY PORTION THEREOF SHALL BE REPRODUCED WITHOUT PRIOR WRITTEN CONSENT OF SAID COMPANY AND ANY SUCH REPRODUCTION SHALL BEAR THIS NOTICE

ALLIED WATER INTEGRATION LTD
# 54 – 5335 6 ST NE,
CALGARY, ALBERTA,
CANADA, T2K 5Y4
PHONE: 403–295–0055
FAX: 403–274–5829

ALLIED WATER INTEGRATION
PEOPLE + TECHNOLOGY = SOLUTIONS

PROJ. NO.:
CONTROL BY: KM
CONTROL NO.: KM–D3

TITLE: PROCESS FLOW DIAGRAM
PROJ.: RETURN WATER TREATMENT
CLIENT: SECURE ENERGY SERVICE
DWG. NO.: SK–0000016
SHEET : 1 OF 1

ALLIED WATER INTEGRATION
PEOPLE + TECHNOLOGY = SOLUTIONS

ALLIED WATER INTEGRATION LTD
#48 - 5335 6 STREET N.E.
CALGARY, AB CANADA T2K 5Y4
OFFICE 403.295.0055
FAX 403.274.5829
ADMIN FAX 403.295.9104

## Appendix C: Pan America Environmental DAF-85 Details

# DAF Series Dissolved Air Flotation Engineering Specification
# DAF12 through DAF600

## EQUIPMENT DESIGN & CONSTRUCTION

**Performance**
The Pan America Environmental DAF Series systems are designed to remove petroleum products, fats, oils & greases (FOG), suspended solids and many other contaminants. Clarification rates as high as 97% can be achieved using the DAF systems.

A percentage of the clean effluent is recycled and super-saturated with air, mixed with the wastewater influent and injected into the DAF separation chamber. The dissolved air comes out of solution, producing millions of microscopic bubbles. These bubbles attach to solids and float them to the surface where they are skimmed and removed from the tank.

## Section 1.0 Equipment

The DAF Dissolved Air Flotation system will be designed and fabricated per the following specifications. The tank shall be a rectangular design with features as described.

**1.01 Float/Separation Chamber**
The separation chamber provides a velocity decreasing horizontal separation surface area that minimizes turbulence and maximizes flow and solids throughput. The mixed wastewater enters this chamber where separation and flotation occur.

The Separation chamber includes the float storage chamber, float baffle, water baffle with adjustable water weir, settleable sludge hopper, surface float skimmer, clean water effluent chamber and the skim ramp.

**1.02 Float Storage Chamber**
As the surface float skimmer continuously skims float from the water surface it conveys float up the skim ramp and deposits it in the float storage chamber which is provided to allow temporary float storage. The chamber has sloped sides to allow solids to slide to the bottom sludge outlets.

**1.03 Effluent Chamber**
The waste flow and float run into the float baffle at the effluent end of the tank. The float is contained while the water is directed under the baffle and over the adjustable 304 stainless steel weir plate. The clean water accumulates in this chamber and is discharged.

**1.04 Sludge Hopper**
A sludge hopper is located under the separation chamber to provide temporary storage of any settleable solids. A sludge auger is provided to convey sludge to the sludge outlet.

**1.05 Sludge Auger System**
The solids hopper is provided with a rotating, screw type sludge auger. The auger consists of stainless steel shafts with coated steel screw auger driven by a slow speed gear motor drive assembly with explosion proof motor. The auger extends the full length of the solids hopper and conveys solids to the sludge outlet.

**1.06 Surface Float Skimmer**
A mechanical surface drag skimmer assembly is provided to sweep the floating solids (float) from the effluent end of the separation chamber toward the influent end. The skimmer consists of 304 stainless skimmer flights and Viton wiper blades and stainless steel flight chain, and sprocket shafts. Steel sprockets and chain guides, variable speed gearmotor, bearings and chain adjustment bearing frames. The flights will be bolted to two roller chains via stainless hardware spanning the width of the tank and will be designed to wipe the tank sides and float ramp. UHMWPE flight wear bars are provided to reduce tank and flight wear.

ALLIED WATER INTEGRATION LTD
#48 - 5335 6 STREET N.E.
CALGARY, AB CANADA T2K 5Y4
OFFICE 403.295.0055
FAX 403.274.5829
ADMIN FAX 403.295.9104

**1.07 Air Saturation System**
The DAF is provided with an air saturation system that is designed to direct a portion of the water from the effluent end of the tank, super-saturate the water with air and then mix this solution with incoming wastewater facilitating intimate mixing of both flows. Recycle saturation pump and schedule 80 PVC piping and valves are mounted on DAF tank with a bypass line to the effluent chamber.

**1.08 Recycle Pump**
A high head, coated cast iron centrifugal, 100 psi recycle pump mounted to the DAF tank is included to provide air saturated water under pressure to the air/wastewater mixing inlet prior to entering the separation chamber. The recycle pump draws ambient air into the pump and saturates the water with this air under high pressure. No external air source is required. A fine air-metering valve with rotometer are provided to control and measure the air flow into the recycle pump.
A discharge control valve and suction control valve are provided to facilitate adjustment and operation of the air saturation process. Discharge and suction pressure gauges are provided. Once adjusted the recycle system can be turned off and on at will without losing settings and saturation process is virtually instantaneous upon startup.

**1.09 Influent Mixing Chamber**
The saturated flow mixes with the wastewater flow at the DAF influent via a mixing chamber. Chamber to be constructed of same material as DAF tank.

**1.10 Controls**
None provided. The standard PAE DAF electrical schematic will be provided for customer use in PLC control logic design.

**1.11 Cover**
The tank is to have a multi-section, steel cover that provides complete closure of the tank. The cover will be mounted to the tank via zinc plate hardware and vapor sealed with an industrial grade closed cell, compressible polyethylene gasket. Three (3) hinged, latched, vapor sealed hatches are provided for inspection. (2) 4" ANSI B16.5 150# flat or raised face flanged vent fitting are provided for location as desired on the cover sections or tank sidewall.

**1.12 Field Technician**
A Field Technician can be provided ask for a quote, per Diem is $950.00 + expenses.

**1.13 Motor Types**
Surface drag skimmer, recycle pump and sludge auger motors are to be explosion proof design for class 1 div 2 group D environments.

## Section 2.0 Materials of Construction

**2.01 Steel Construction**
Tank shell, baffles and internal structural members shall be constructed of A-36 carbon steel. Weld joints are to be double welded and dye penetrant tested.

**2.02 Surface Preparation**
Interior surfaces shall be prepared to an SSPC-SP10 near white metal blast. Exterior surfaces shall be prepared to an SSPC-SP6 commercial blast.

**2.03 Coatings**
Interior coating shall be coated with Ameron High Build Coal Tar Epoxy Amercoat 78HB (16-20 mils DFT). Exterior coating shall be coated with Ameron epoxy primer, Amerlock 2, (5-8 mils DFT). Final coat to be Ameron Amershield Aliphatic Polyurethane Enamel coat (5 mils DFT). Surface color to be Green RT-2203.

**2.04 Internal Piping**
Internal piping shall be ASTM A53 black steel.

**2.05 Hardware**
All wetted hardware to be ANSI, 316 stainless steel. All non-wetted hardware to be zinc plated.

**2.06 I.O.M. Manuals**
Two copies of the Installation, Operation and Maintenance manuals will be provided.

**2.07 Assembly**
The DAF components will be installed on or in the DAF tank, plumbed, wired and functionally tested prior to shipping. The manufacturer of preference shall be: Pan America Environmental

**2.08 Warranty**
Pan America Environmental warrants its products to be free of defect in materials and workmanship for a period of one year from the date of shipment.

## Section 3.0 Freight and Shipping Preparation

**3.01 Freight Cost**
The quoted freight cost is an actual or estimated cost. This cost is subject to change throughout the life of the quote and any resultant order.

**3.02 Palletizing**
All equipment prices include palletization where equipment size requires a pallet. Most DAF designs require flat bed shipment.

ALLIED WATER INTEGRATION
PEOPLE + TECHNOLOGY = SOLUTIONS

ALLIED WATER INTEGRATION LTD
#48 - 5335 6 STREET N.E.
CALGARY, AB CANADA T2K 5Y4
OFFICE 403.295.0055
FAX 403.274.5829
ADMIN FAX 403.295.9104

**DAF System Configuration**

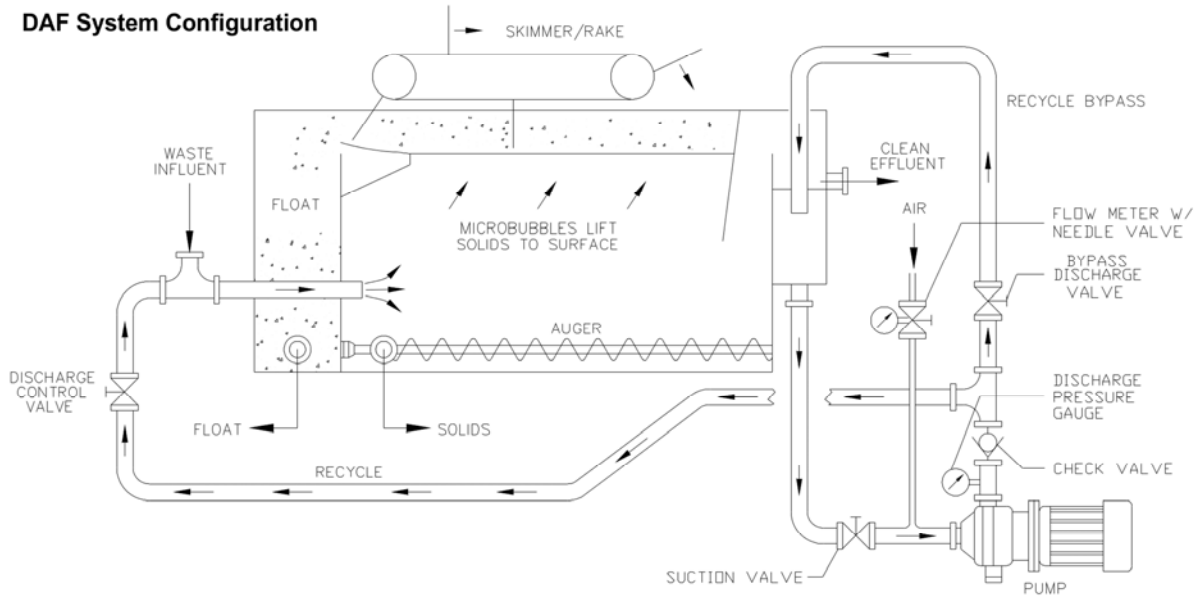


The PAE DAF design incorporates today's "state-of-the-art" technology in DAF design.

This design simplifies the DAF process, requires less startup time, less capital cost, instrumentation, labor and maintenance. The design is process and operator friendly, providing almost instant saturation upon system startup without equalization and complex startup procedures. Higher air transfer efficiencies are also realized due to higher saturation pressures with 12% air @ 93% entrainment.

ALLIED WATER INTEGRATION
PEOPLE + TECHNOLOGY = SOLUTIONS

ALLIED WATER INTEGRATION LTD
#48 - 5335 6 STREET N.E.
CALGARY, AB CANADA T2K 5Y4
OFFICE 403.295.0055
FAX 403.274.5829
ADMIN FAX 403.295.9104

## DAF Dimensions

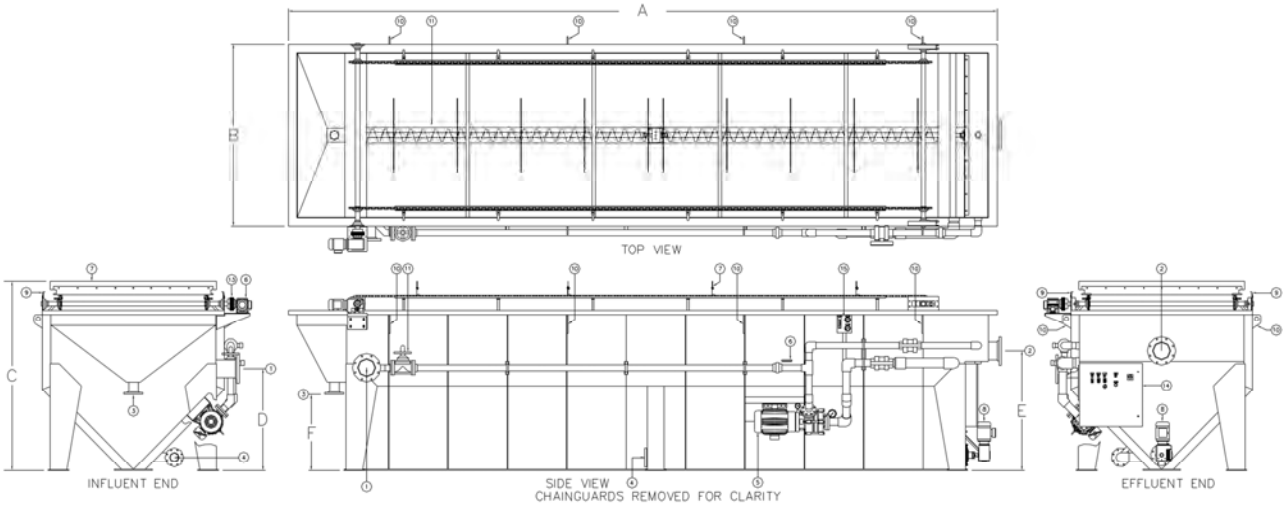


| Model | Length A | Width B | Height C | Inlet D | Outlet E | Float Outlet F | Sludge Vol. Gal. | Float Hopper Gal. | Inlet Size | Outlet Size | Sludge Outlet Size | Float Outlet Size | Drain | Empty Weight | Operat. Weight | Area Ft2 | Flow Rate GPM (Max.) |
|---|---|---|---|---|---|---|---|---|---|---|---|---|---|---|---|---|---|
| DAF-60 | 15'-2" | 6'-0" | 5'-7" | 4'-4" | 3'-11" | 2'-9" | 700 | 70 | 4" | 4" | 4" | 3" | 2" | 4876 | 19376 | 60 | 120 |
| DAF-85 | 19'-8" | 6'-0" | 5'-7" | 4'-4" | 3'-11" | 2'-9" | 850 | 90 | 4" | 4" | 4" | 3" | 2" | 5356 | 25110 | 85 | 170 |
| DAF-100 | 22'-11" | 6'-2" | 5'-7" | 4'-4" | 3'-11" | 2'-9" | 1090 | 110 | 6" | 6" | 4" | 3" | 2" | 6100 | 29000 | 100 | 200 |
| DAF-120 | 24'-3" | 6'-7" | 6'-7" | 4'-4" | 5'-1" | 2'-2" | 1160 | 175 | 6" | 6" | 4" | 4" | 2" | 10600 | 50000 | 120 | 250 |
| DAF-150 | 27'-3" | 7'-2" | 6'-10" | 4'-4" | 5'-1" | 2'-2" | 1300 | 205 | 6" | 6" | 4" | 4" | 2" | 12200 | 74000 | 150 | 300 |
| DAF-180 | 28'-3" | 8'-2" | 8'-0" | 5'-6" | 6'-1" | 2'-0" | 1435 | 280 | 8" | 8" | 4" | 4" | 2" | 14000 | 92000 | 180 | 360 |
| DAF-200 | 31'-1" | 8'-2" | 8'-0" | 5'-6" | 6'-1" | 2'-0" | 1500 | 315 | 10" | 10" | 4" | 4" | 2" | 15100 | 101k | 200 | 400 |
| DAF-250 | 33'-1" | 9'-0" | 8'-5" | 6'-0" | 6'-4" | 1'-8" | 1580 | 360 | 10" | 10" | 4" | 4" | 2" | 18200 | 130k | 250 | 500 |
| DAF-300 | 36'-0" | 9'-0" | 8'-5" | 6'-0" | 6'-4" | 1'-8" | 1660 | 400 | 12" | 12" | 4" | 4" | 2" | 20800 | 166k | 300 | 600 |
| DAF-350 | 42'-0" | 10'-4" | 9'-0" | 6'-2" | 7'-2" | 1'-8" | 1740 | 450 | 12" | 12" | 4" | 4" | 2" | 22300 | 175k | 350 | 700 |
| DAF-400 | 48'-0" | 10'-4" | 9'-0" | 6'-2" | 7'-2" | 1'-6" | 1900 | 530 | 12" | 12" | 4" | 4" | 2" | 25350 | 225k | 400 | 800 |
| DAF-450 | 55'-0" | 10'-4" | 9'-6" | 6'-2" | 7'-2" | 1'-6" | 2450 | 620 | 14" | 14" | 4" | 4" | 2" | 29000 | 241k | 450 | 900 |
| DAF-550 | 59'-0" | 11'-0" | 9'-6" | 6'-6" | 7'-2" | 1'-6" | 2900 | 695 | 14" | 14" | 4" | 4" | 2" | 39700 | 268k | 550 | 1100 |
| DAF-600 | 62'-0" | 11'-4" | 9'-8" | 6'-6" | 8'-0" | 1'-6" | 3735 | 750 | 14" | 14" | 4" | 4" | 2" | 46000 | 295k | 600 | 1500 |

**Dimensions, design and capacities are not for construction and are subject to change without notice. Maximum flow rate is based on influent flow + recycle flow.**

| Item | Qty | Description | Item | Qty | Description | Item | Qty | Description | Item | Qty | Description | Item | Qty | Description |
|---|---|---|---|---|---|---|---|---|---|---|---|---|---|---|
| 1 | 1 | Inlet | 4 | 1 | Sludge outlet | 7 | - | Skimmer flight | 10 | 6 | Lifting lug | 13 | 1 | Overload |
| 2 | 1 | Outlet | 5 | 1 | DAF pump | 8 | 1 | Auger drive | 11 | 1 | Recycle valve | 14 | 1 | Control panel |
| 3 | 1 | Float Outlet | 6 | 1 | Skimmer drive | 9 | 2 | Chainguard | 12 | 1 | Auger | 15 | 4 | Gauge panel |

ALLIED WATER INTEGRATION LTD
#48 - 5335 6 STREET N.E.
CALGARY, AB CANADA T2K 5Y4
OFFICE 403.295.0055
FAX 403.274.5829
ADMIN FAX 403.295.9104

## Appendix D: MSD Sheets of Chemicals Used

Please refer to the following pages for the MSD sheets of the proposed chemicals to be used in the treatment plant.

# MATERIAL SAFETY DATA SHEET

# Sodium Hypochlorite 3-20%

## Section 01 - Product And Company Information

**Product Identifier** …….. Sodium Hypochlorite (3-20%)

**Product Use** ……..... Disinfectant, bleaching agent, source of available chlorine, deodorizer.

**Supplier Name**……..… ClearTech Industries Inc.
1500 Quebec Avenue
Saskatoon, SK. Canada
S7K 1V7

**Prepared By**.....……..….. ClearTech Industries Inc. Technical Department
Phone: (306)664-2522

**Preparation Date**.....…….…. September 5, 2012

**24-Hour Emergency Phone**…….. 306-664-2522

## Section 02 - Composition / Information on Ingredients

**Hazardous Ingredients**....……..... Sodium Hypochlorite 3.02-16.80%

**CAS Number**.....…….……..... Sodium Hypochlorite 7681-52-9

**Synonym (s)**.....……...Industrial bleach, hypo, bleach, Javel water, household bleach

## Section 03 - Hazard Identification

**Inhalation**.....…….…..... Irritant of the nose and throat, causing coughing, difficulty breathing, and pulmonary edema.

**Skin Contact / Absorption**…….. Causes severe skin irritation with blistering and ulceration.

**Eye Contact**.....……... Causes severe irritation of the mucous membranes of the eyes. May cause severe eye damage.

**Ingestion**.....……. Burning of the mouth and throat, abdominal cramps, nausea, vomiting, diarrhea, shock. May lead to convulsions, coma, and even death.

**Exposure Limits**…….. ACGIH/TLV-TWA: 0.5ppm (chlorine)

## Section 04 - First Aid Measures

**Inhalation**.....…….. Remove victim to fresh air. Give artificial respiration only if breathing has stopped. If breathing is difficult, give oxygen. Seek immediate medical attention.

**Skin Contact / Absorption**…….. Remove contaminated clothing. Wash affected area with soap and water. Seek medical attention if irritation occurs or persists.

**Eye Contact**.....……... Flush immediately with water for at least 20 minutes. Forcibly hold eyelids apart to ensure complete irrigation of eye tissue. Seek immediate medical attention.

**Ingestion**.....……. Do not induce vomiting. If vomiting occurs, lean victim forward to prevent breathing in vomitus. Give large amounts of water. Do not give anything by mouth to an unconscious or convulsing person. Seek immediate medical attention.

**Additional Information**.....……... Not available

## Section 05 - Fire Fighting Measures

**Conditions of Flammability**……... Non-flammable

**Means of Extinction**.....……... Product does not burn. Use appropriate extinguishing media for material that is supplying the fuel to the fire.

**Flash Point**....……. Not applicable

**Auto-ignition Temperature**……. Not applicable

**Upper Flammable Limit** …….. Not applicable

**Lower Flammable Limit**..... Not applicable

**Hazardous Combustible Products**... Decomposition may produce chlorine gas and/or hydrogen chloride gas.

**Special Fire Fighting Procedures**..... Wear NIOSH-approved self-contained breathing apparatus and protective clothing.

**Explosion Hazards**..... Pressure buildup in containers could result in an explosion when heated or in contact with acidic fumes. Vigorous reaction with oxidizable organic materials may result in a fire.

## Section 06 - Accidental Release Measures

**Leak / Spill**..... Wear appropriate personal protective equipment. Ventilate area. Stop or reduce leak if safe to do so. Restrict access to spill area until clean up is complete. Prevent material from entering sewers, waterways or confined spaces. Soak up smaller spills with absorbent material that does not react with spilled material. Flush with water to remove any residue.

**Deactivating Materials**..... Spills can be carefully neutralized first with sodium sulphite, sodium metabisulphite or other dechlorination agent for no chlorine residual, then a pH adjustment may be required with hydrochloric acid until the pH is 7. Note neutralization reactions may produce heat so necessary precautions must be taken. Local regulatory agencies should also be contacted for proper disposal.

## Section 07 - Handling and Storage

**Handling Procedures**..... Use proper equipment for lifting and transporting all containers. Use sensible industrial hygiene and housekeeping practices. Wash thoroughly after handling. Avoid all situations that could lead to harmful exposure.

**Storage Requirements**..... Store in a cool, dry, well-ventilated place. Keep container tightly closed, and away from incompatible materials. Venting of containers is advisable.

## Section 08 - Personal Protection and Exposure Controls

### Protective Equipment

**Eyes**..... Chemical goggles, full-face shield, or a full-face respirator is to be worn at all times when product is handled. Contact lenses should not be worn; they may contribute to severe eye injury.

**Respiratory**..... A NIOSH-approved respirator suitable for chlorine is recommended. Where a higher level of protection is required, use a self-contained breathing apparatus.

**Gloves**……..... Impervious gloves of chemically resistant material (rubber or PVC) should be worn at all times. Wash contaminated clothing and dry thoroughly before reuse.

**Clothing**……..……..... Body suits, aprons, and/or coveralls of chemical resistant material should be worn at all times. Wash contaminated clothing and dry thoroughly before reuse.

**Footwear**……..... Impervious boots of chemically resistant material should be worn at all times.

### Engineering Controls

**Ventilation Requirements**……..... Mechanical ventilation (dilution or local exhaust), process or personnel enclosure and control of process conditions should be provided. Supply sufficient replacement air to make up for air removed by exhaust systems.

**Other**……..... Emergency shower and eyewash should be in close proximity.

## Section 09 - Physical and Chemical Properties

**Physical State**.....……...……... Liquid

**Odor and Appearance**…..……... Strong chlorine odour. Clear, greenish-yellow solution.

**Odor Threshold**....……..... Not available

**Specific Gravity (Water=1)**…….. 1.17 at 20°C (12% trade)

**Vapor Pressure (mm Hg, 20C)**…….. 12.1mm Hg at 20°C (12.5 wt %)

**Vapor Density (Air=1)**..……... Not available

**Evaporation Rate**.....……..…….. Not available

**Boiling Point**.....…….…..... Slowly decomposes above 40°C.

**Freeze/Melting Point**....……... ~ -15°C (12% trade)

**pH**.....…….. < 12

**Water/Oil Distribution Coefficient**.... Not available

**Bulk Density**.....…….. Not available

**% Volatiles by Volume**……..……... Not available

**Solubility in Water**..... Complete

**Molecular Formula**..... NaOCl

**Molecular Weight**..... 74.44

## Section 10 - Stability and Reactivity

**Stability**..... Unstable at temperatures above 40°C, in sunlight, and in contact with acid.

**Incompatibility**..... Incompatible with strong acids, ammonia, oxidizable materials, nickel, copper, tin, manganese, and iron.

**Hazardous Products of Decomposition**.. Chlorine (by reaction with acids), oxygen (by reaction with nickel, copper, tin, manganese, iron), sodium chloride, sodium chlorate, with increased temperature.

**Polymerization**..... Will not occur

## Section 11 - Toxicological Information

**Irritancy**..... Strong irritant

**Sensitization**..... Not available

**Chronic/Acute Effects**..... If over-exposed to the solution, there will be constant irritation of the eyes, nose, and throat.

**Synergistic Materials**..... Not available

**Animal Toxicity Data**..... $LD_{50}$(oral,rat): 8910mg/kg (undiluted sodium hypochlorite)

**Carcinogenicity**..... Not considered to be carcinogenic (IARC and ACGIH).

**Reproductive Toxicity**..... Not available

**Teratogenicity**..... Not available

**Mutagenicity**..... Not available

## Section 12 - Ecological Information

**Fish Toxicity**..... Not available

**Biodegradability**.....……..... Not available

**Environmental Effects**……. Not available

## Section 13 - Disposal Consideration

**Waste Disposal**.....…...…….. Dispose in accordance with all federal, provincial, and/or local regulations including the Canadian Environmental Protection Act.

## Section 14 - Transport Information

**TDG Classification**

**Class**……..……..…..... 8 (not regulated at solutions below 7%)

**Group**.....…….....…….. III (not regulated at solutions below 7%)

**PIN Number**.....……..…….. UN 1791(not regulated at solutions below 7%)

**Other**……..... Secure containers (full and/or empty) with suitable hold down devises during shipment.

## Section 15 - Regulatory Information

**WHMIS Classification**.....……....E

**NOTE: THE PRODUCT LISTED ON THIS MSDS HAS BEEN CLASSIFIED IN ACCORDANCE WITH THE HAZARD CRITERIA OF THE CANADIAN CONTROLLED PRODUCTS REGULATIONS. THIS MSDS CONTAINS ALL INFORMATION REQUIRED BY THOSE REGULATIONS.**

**NSF Certification**.....Product is certified under NSF/ANSI Standard 60 for disinfection and oxidation at a maximum dosage for the following:

sodium hypochlorite 5%: 174mg/L
sodium hypochlorite 6%: 145mg/L
sodium hypochlorite 7%: 125mg/L
sodium hypochlorite 8%: 109mg/L
sodium hypochlorite 9%: 97mg/L
sodium hypochlorite 10%: 87mg/L
sodium hypochlorite 11%: 79mg/L
sodium hypochlorite 12%: 72mg/L
sodium hypochlorite 13%: 67mg/L
sodium hypochlorite 14%: 62mg/L
sodium hypochlorite 15%: 58mg/L
sodium hypochlorite 16%: 55mg/L
sodium hypochlorite 17%: 51mg/L
sodium hypochlorite 18%: 48mg/L
sodium hypochlorite 19%: 46mg/L
sodium hypochlorite 20%: 43mg/L

**NOTE: Any product strength below 7% is not regulated by TDG.**

**Sanitizer Use:** to obtain 10 liters of a 200 mg/L solution as available chlorine, use 16.7 mL of Hypochlor-12 for each 10 liters of clean, potable water.

## Section 16 - Other Information

**Note:** The responsibility to provide a safe workplace remains with the user. The user should consider the health hazards and safety information contained herein as a guide and should take those precautions required in an individual operation to instruct employees and develop work practice procedures for a safe work environment. The information contained herein is, to the best of our knowledge and belief, accurate. However, since the conditions of handling and use are beyond our control, we make no guarantee of results, and assume no liability for damages incurred by the use of this material. It is the responsibility of the user to comply with all applicable laws and regulations.

**Attention: Receiver of the chemical goods / MSDS coordinator**

As part of our commitment to the Canadian Association of Chemical Distributors (CACD) Responsible Distribution® initiative, ClearTech Industries Inc. and its associated companies require, as a condition of sale, that you forward the attached Material Safety Data Sheet(s) to all affected employees, customers, and end-users. ClearTech will send any available supplementary handling, health, and safety information to you at your request.

If you have any questions or concerns please call our customer service or technical service department.

## ClearTech Industries Inc. - Locations

**Corporate Head Office: 1500 Quebec Avenue, Saskatoon, SK, S7K 1V7**
**Phone: 306-664-2522**
**Fax: 306-665-6216**

**www.ClearTech.ca**

| Location | Address | Postal Code | Phone Number | Fax Number |
|---|---|---|---|---|
| Richmond, B.C. | 12431 Horseshoe Way | V7A 4X6 | 604-272-4000 | 604-272-4596 |
| Calgary, AB. | 5516E - 40th St. S.E. | T2C 2A1 | 403-279-1096 | 403-236-0989 |
| Edmonton, AB. | 11750 - 180th Street | T5S 1N7 | 780-452-6000 | 780-452-4600 |
| Saskatoon, SK. | 19 Peters Ave, North Corman Park | S7K 1V7 | 306-933-0177 | 306-933-3282 |
| Regina, SK. | 555 Henderson Drive | S42 5X2 | 306-721-7737 | 306-721-8611 |
| Winnipeg, MB. | 340 Saulteaux Crescent | R3J 3T2 | 204-987-9777 | 204-987-9770 |
| Mississauga, ON. | 7480 Bath Road | L4T 1L2 | 905-612-0566 | 905-612-0575 |

## 24 Hour Emergency Number - All Locations - 306-664-2522

CLEARTECH

# MATERIAL SAFETY DATA SHEET

# Sodium Hydroxide Solution

## Section 01 - Product And Company Information

**Product Identifier** …….. Sodium Hydroxide Solution [4-50%]

**Product Use** ……..... Acid neutralization, petroleum refining, manufacture of paper products, metal cleaning, regeneration of ion exchange resins.

**Supplier Name**…….…. ClearTech Industries Inc.
1500 Quebec Avenue
Saskatoon, SK. Canada
S7K 1V7

**Prepared By**.....……..….. ClearTech Industries Inc. Technical Department
Phone: (306)664-2522

**Preparation Date**.....…….…. May 17, 2013

**24-Hour Emergency Phone**…….. 306-664-2522

## Section 02 - Composition / Information on Ingredients

**Hazardous Ingredients**....……..... Sodium Hydroxide <= 50%

**CAS Number**.....……..... Sodium Hydroxide 1310-73-2

**Synonym (s)**.....……...Caustic soda, sodium hydrate, lye, liquid caustic, caustic

## Section 03 - Hazard Identification

**Inhalation**.....…….…... Inhalation is only likely to occur if an aerosol is formed as sodium hydroxide does not readily form a vapour. Exposure to aerosol may lead to irritation of respiratory tract, inflammation of lungs, difficulty breathing. May cause pulmonary edema.

**Skin Contact / Absorption**…….. Severe burning, frequently deep ulcerations and ultimate scarring. Destructive effect on tissues.

**Eye Contact**.....……... Instantaneous painful irritation of the eyes. Can penetrate deeply causing irritation or severe burns depending on the concentration and duration of exposure. in severe cases, ulceration and blindness may occur.

**Ingestion**.....……. Burning of the mouth, throat, and esophagus; vomiting; diarrhea; edema; swelling of larynx; and subsequent suffocation. Perforation of gastrointestinal tract can occur.

**Exposure Limits**…….. ACGIH/TLV-TWA: 2mg/m$^3$ (8 hrs)

## Section 04 - First Aid Measures

**Inhalation**.....…….. Remove victim to fresh air. Give artificial respiration only if breathing has stopped. If breathing is difficult, give oxygen. Seek immediate medical attention.

**Skin Contact / Absorption**…….. Remove contaminated clothing. Wash affected area with soap and water. Seek medical attention if irritation occurs or persists.

**Eye Contact**.....……... Check for and remove any contact lenses. Flush immediately with water for at least 20 minutes. Forcibly hold eyelids apart to ensure complete irrigation of eye tissue. Seek immediate medical attention.

**Ingestion**.....……. Do not induce vomiting. If vomiting occurs, lean victim forward to prevent breathing in vomitus. Give a cup of water to dilute chemical in stomach. If vomiting occurs, give another cup of water after vomiting. Do not give anything by mouth to an unconscious or convulsing person. Seek immediate medical attention.

**Additional Information**.....……... Not available

## Section 05 - Fire Fighting Measures

**Conditions of Flammability**……... Non-flammable. Reaction with metals may generate explosive hydrogen gas.

**Means of Extinction**.....……... Product does not burn. Where fire is involved, use any fire fighting agent appropriate for surrounding material; use water spray to cool fire-exposed surfaces.

**Flash Point**....……. Not applicable

**Auto-ignition Temperature**……. Not applicable

**Upper Flammable Limit** …….. Not applicable

**Lower Flammable Limit**...……..….. Not applicable

**Hazardous Combustible Products**... Fumes of sodium oxide can be generated by thermal decomposition at high temperatures. Reactions of sodium hydroxide with water and some commonly encountered materials can generate sufficient heat to ignite nearby combustible materials.

**Special Fire Fighting Procedures**..... Wear NIOSH-approved self-contained breathing apparatus and protective clothing.

**Explosion Hazards**……... Not available

## Section 06 - Accidental Release Measures

**Leak / Spill**.....…….. Wear appropriate personal protective equipment. Restrict access to area. Stop or reduce leak if safe to do so. Prevent material from entering sewers and waterways. Contain spill or leak by diking with inert material such as sand or earth. Small spills can be recovered or carefully diluted with water and neutralized, preferably with acetic acid. For large spills contact appropriate regulatory authorities.

**Deactivating Materials**...……..…... Small spills can be diluted and cautiously neutralized, preferably with acetic acid. Diluted hydrochloric acid can also be used to neutralize small spills.

## Section 07 - Handling and Storage

**Handling Procedures**.....…….. Use proper equipment for lifting and transporting all containers. Use sensible industrial hygiene and housekeeping practices. Wash thoroughly after handling. Avoid all situations that could lead to harmful exposure.

**Storage Requirements**.....……..….. Store in a cool, dry, well-ventilated place. Keep container tightly closed, and away from incompatible materials such as strong acids, nitroaromatic, nitroparaffinic, organohalogen compounds and metals such as aluminum, zinc and tin.

CLEARTECH

## Section 08 - Personal Protection and Exposure Controls

### Protective Equipment

**Eyes**..... Chemical goggles, full-face shield, or a full-face respirator is to be worn at all times when product is handled. Contact lenses should not be worn; they may contribute to severe eye injury.

**Respiratory**..... NIOSH-approved respirator for dust and mist should be worn, if needed (ie: when pouring large quantities through the air without local exhaust).

**Gloves**..... Impervious gloves of chemically resistant material (rubber or PVC) should be worn at all times. Wash contaminated clothing and dry thoroughly before reuse.

**Clothing**..... Body suits, aprons, and/or coveralls of chemical resistant material should be worn at all times. Wash contaminated clothing and dry thoroughly before reuse.

**Footwear**..... Impervious boots of chemically resistant material should be worn at all times.

### Engineering Controls

**Ventilation Requirements**..... Mechanical ventilation (dilution or local exhaust), process or personnel enclosure, and control of process conditions should be provided. Supply sufficient replacement air to make up for air removed by exhaust systems.

**Other**..... Emergency shower and eyewash should be in close proximity.

## Section 09 - Physical and Chemical Properties

**Physical State**..... Liquid

**Odor and Appearance**..... Odourless, clear to slightly turbid, viscous liquid

**Odor Threshold**..... Not applicable

**Specific Gravity (Water=1)**..... 1.52 (50%)

**Vapor Pressure (mm Hg, 20C)**..... 1.5mm Hg at 25°C

**Vapor Density (Air=1)**..... Not available

**Evaporation Rate**..... Not available

**Boiling Point**..... 140°C (50%)

**Freeze/Melting Point**..... approx. 12°C (50%)

**pH**..... 14

**Water/Oil Distribution Coefficient**.... Not available

**Bulk Density**..... Not available

**% Volatiles by Volume**..... Not available

**Solubility in Water**..... Completely miscible

**Molecular Formula**..... NaOH

**Molecular Weight**..... 40.00

## Section 10 - Stability and Reactivity

**Stability**..... Stable under normal conditions.

**Incompatibility**..... Incompatible with strong acids, ammonia, tin, aluminum, zinc, organohalogen compounds, nitro and chloro organic compounds, flammable liquids, nitromethane, whey solids, methanol and nitrous compounds.

**Hazardous Products of Decomposition**.. Sodium hydroxide can react with metals, such as aluminum, tin and zinc, to form flammable hydrogen gas.

**Polymerization**..... Will not occur

## Section 11 - Toxicological Information

**Irritancy**..... Corrosive, severe irritant.

**Sensitization**..... Not available

**Chronic/Acute Effects**..... There have been no documented effects due to long-term exposure to sodium hydroxide.

**Synergistic Materials**..... Not available

**Animal Toxicity Data**..... $LD_{50}$(Intraperitoneal, Mice): 40mg/kg (50%)

**Carcinogenicity**..... Not considered to be carcinogenic by ACGIH and IARC.

**Reproductive Toxicity**..... Not available

**Teratogenicity**..... Not available

**Mutagenicity**..... Not available

## Section 12 - Ecological Information

**Fish Toxicity**..... Not available

**Biodegradability**..... Not biodegradable

**Environmental Effects**..... Toxic to aquatic life through an immediate raise in pH to toxic levels.

## Section 13 - Disposal Consideration

**Waste Disposal**..... Dispose in accordance with all federal, provincial, and/or local regulations including the Canadian Environmental Protection Act.

## Section 14 - Transport Information

**TDG Classification**

**Class**..... 8

**Group**..... II

**PIN Number**..... UN1824

**Other**..... Secure containers (full and/or empty) with suitable hold down devises during shipment and ensure all caps, valves, or closures are secured in the closed position.

## Section 15 - Regulatory Information

**WHMIS Classification**.....E

**NOTE: THE PRODUCT LISTED ON THIS MSDS HAS BEEN CLASSIFIED IN ACCORDANCE WITH THE HAZARD CRITERIA OF THE CANADIAN CONTROLLED PRODUCTS REGULATIONS. THIS MSDS CONTAINS ALL INFORMATION REQUIRED BY THOSE REGULATIONS.**

**NSF Certification**.....Product is certified under NSF/ANSI Standard 60 for corrosion and scale control and pH adjustment at a maximum dosage for the following:

sodium hydroxide 10%: 500mg/L
sodium hydroxide 11%: 454mg/L
sodium hydroxide 12%: 432mg/L

sodium hydroxide 13%: 399mg/L
sodium hydroxide 14%: 366mg/L
sodium hydroxide 15%: 333mg/L
sodium hydroxide 16%: 318mg/L
sodium hydroxide 17%: 301mg/L
sodium hydroxide 18%: 284mg/L
sodium hydroxide 19%: 267mg/L
sodium hydroxide 20%: 250mg/L
sodium hydroxide 21%: 240mg/L
sodium hydroxide 22%: 230mg/L
sodium hydroxide 23%: 220mg/L
sodium hydroxide 24%: 210mg/L
sodium hydroxide 25%: 200mg/L
sodium hydroxide 26%: 195mg/L
sodium hydroxide 27%: 188mg/L
sodium hydroxide 28%: 181mg/L
sodium hydroxide 29%: 174mg/L
sodium hydroxide 30%: 167mg/L
sodium hydroxide 31%: 163mg/L
sodium hydroxide 32%: 158mg/L
sodium hydroxide 33%: 153mg/L
sodium hydroxide 34%: 148mg/L
sodium hydroxide 35%: 143mg/L
sodium hydroxide 36%: 141mg/L
sodium hydroxide 37%: 137mg/L
sodium hydroxide 38%: 133mg/L
sodium hydroxide 39%: 129mg/L
sodium hydroxide 40%: 125mg/L
sodium hydroxide 41%: 123mg/L
sodium hydroxide 42%: 120mg/L
sodium hydroxide 43%: 117mg/L
sodium hydroxide 44%: 114mg/L
sodium hydroxide 45%: 111mg/L
sodium hydroxide 46%: 108mg/L
sodium hydroxide 47%: 106mg/L
sodium hydroxide 48%: 104mg/L
sodium hydroxide 49%: 102mg/L
sodium hydroxide 50%: 100mg/L

## Section 16 - Other Information

**Note:** The responsibility to provide a safe workplace remains with the user. The user should consider the health hazards and safety information contained herein as a guide and should take those precautions required in an individual operation to instruct employees and develop work practice procedures for a safe work environment. The information contained herein is, to the best of our knowledge and belief, accurate. However, since the conditions of handling and use are beyond our control, we make no guarantee of results, and assume no liability for damages incurred by the use of this material. It is the responsibility of the user to comply with all applicable laws and regulations.

**Attention: Receiver of the chemical goods / MSDS coordinator**

As part of our commitment to the Canadian Association of Chemical Distributors (CACD) Responsible Distribution® initiative, ClearTech Industries Inc. and its associated companies require, as a condition of sale, that you forward the attached Material Safety Data Sheet(s) to all affected employees, customers, and end-users. ClearTech will send any available supplementary handling, health, and safety information to you at your request.

If you have any questions or concerns please call our customer service or technical service department.

## ClearTech Industries Inc. - Locations

**Corporate Head Office: 1500 Quebec Avenue, Saskatoon, SK, S7K 1V7**
**Phone: 306-664-2522**
**Fax: 306-665-6216**

**www.ClearTech.ca**

| Location | Address | Postal Code | Phone Number | Fax Number |
|---|---|---|---|---|
| Richmond, B.C. | 12431 Horseshoe Way | V7A 4X6 | 604-272-4000 | 604-272-4596 |
| Calgary, AB. | 5516E - 40th St. S.E. | T2C 2A1 | 403-279-1096 | 403-236-0989 |
| Edmonton, AB. | 12020 - 142nd Street | T5L 2G8 | 780-452-6000 | 780-452-4600 |
| Saskatoon, SK. | 19 Peters Ave, North Corman Park | S7K 1V7 | 306-933-0177 | 306-933-3282 |
| Regina, SK. | 555 Henderson Drive | S42 5X2 | 306-721-7737 | 306-721-8611 |
| Winnipeg, MB. | 340 Saulteaux Crescent | R3J 3T2 | 204-987-9777 | 204-987-9770 |
| Mississauga, ON. | 7480 Bath Road | L4T 1L2 | 905-612-0566 | 905-612-0575 |

## 24 Hour Emergency Number - All Locations - 306-664-2522

Saltex, LLC
7755 Bellaire South
Ft. Worth, TX 76132
USA Tel:
877-872-5839

# MATERIAL SAFETY DATA SHEET
# SODIUM SULFATE ANHYDROUS
January 1, 2013

## SECTION I: CHEMICAL PRODUCT AND COMPANY INFORMATION

**Product Name:** Sodium Sulfate
**General Use:**
**Common Synonyms:** Sodium sulfate, Anhydrous; Sulfuric Acid, Disodium Salt; Disodium Sulfate
**Chemical Family:** Neutral Salts
**Formula:** $Na_2SO_4$
**Formula Weight:** 142.04
**CAS No.:** 7757-82-6
**Manufacturer:** Saltex, LLC

## SECTION II: COMPOSITION/INFORMATION ON INGREDIENTS

| Component | WEIGHT % | CAS # |
|---|---|---|
| Sodium Sulfate, Anhydrous | 99 – 100 | 7757-82-6 |

| Component | Hazard | OSHA STEL | OSHA PEL | ACGIH TLV |
|---|---|---|---|---|
| Sodium Sulfate, Anhydrous | Irritant | N/E | N/E | N/E |

**EXTENDED INFORMATION**

## SECTION III: HAZARDS IDENTIFICATION

EMERGENCY OVERVIEW

**CAUTION! MAY CAUSE IRRITATION. MAY BE HARMFUL IF SWALLOWED OR INHALED. HYGROSCOPIC**. During use avoid contact with eyes, skin or clothing. Wash thoroughly after handling. When not in use, keep in tightly closed container.

POTENTIAL HEALTH EFFECTS

EYE CONTACT: Irritation

SKIN CONTACT: Irritation

INGESTION: Gastrointestinal irritation

INHALATION: Irritation of the upper respiratory tract.

CHRONIC: None identified

TARGET ORGANS: Respiratory system, lungs.

Primary routes of entry:

Inhalation ☑ Ingestion ☑
Skin Contact ☑ Eye Contact ☑

MEDICAL CONDITIONS AGGRAVATED BY EXPOSURE: None identified

---

## SECTION IIII: FIRST AID MEASURES

EYE CONTACT:

In case of eye contact, immediately flush with plenty of water for at least 15 minutes.

SKIN CONTACT:

In case of contact, immediately wash skin with plenty of soap and water for at least 15 minutes.

INGESTION:

If swallowed and the person is conscious, immediately give large amounts of water. Get medical attention.

INHALATION:
If a person breathers in large amounts, move the exposed person to fresh air.

NOTES TO PHYSICAN: None

---

## SECTION V: FIRE FIGHTING INFORMATION

Flashpoint (Degrees C) and Method: N/A
Auto ignition Temperature (Degrees C): N/A

FLAMMABLE LIMITS:

| Components | Upper Explosive Limit | Lower Explosive Limit |
|---|---|---|
| Sodium Sulfate, Anhydrous | N/A | N/A |

GENERAL HAZARD:
Unusual Fire and Explosion Hazards: None Identified.

FIRE FIGHTING INSTRUCTIONS:
Use extinguishing media appropriate for surrounding fire.

FIRE FIGHTING EQUIPMENT:
Firefighters should wear proper protective equipment and self-contained breathing Apparatus with full facepiece operated in positive pressure mode.

EXTINGUISHING MEDIA:

Foam ☑ Alcohol Foam ☑ CO2 ☑
Dry Chemical ☑ Water ☑ Other ☑

HAZARDOUS COMBUSTION PRODUCTS:
Combustion may release sulfur dioxide.

NATIONAL FIRE PROTECTION ASSOCIATION (NFPA):

| | | | |
|---|---|---|---|
| NFPA Hazard Rating: | 0 – Insignificant | 1 – Slight | 2 – Moderate |
| | 3 - High | 4 – Extreme | 5 – Unknown |
| | *- No Information | | |

Health :0
Flammability :0
Reactivity :0

SPECIAL INFORMATION:

| | |
|---|---|
| Contact Hazard: | Slight (1) |
| Explosion Data – Sensitivity to Mechanical Impact: | None Identified |
| Explosion Data - Sensitivity to Static Discharge: | None Identified |

---

## SECTION VI: ACCIDENTAL RELEASE MEASURES

LAND SPILL:
Wear suitable protective clothing. Sweep up and remove.

---

## SECTION VII: HANDLING AND STORAGE

GENERAL STORAGE CONDITIONS:
Keep container tightly closed. Keep from contact with oxidizing materials. Isolate from incompatible materials.
Special Precautions: material is hygroscopic.

---

## SECTION VIII: EXPOSURE CONTROLS/PERSONAL PROTECTION

ENGINEERING CONTROLS:
Use adequate general or local exhaust ventilation to keep fume or dust levels as low as possible.

PERSONAL PROTECTION:

RESPIRATOR:
None required where adequate ventilation conditions exist. If airborne concentration is high, use an appropriate respirator or dust mask.

PROTECTIVE CLOTHING:
Safety goggles, rubber gloves recommended.

---

## SECTION VIIII: PHYSICAL AND CHEMICAL PROPERTIES

Vapor Pressure (mmHg): N/A Solubility in Water: Appreciable
Specific Gravity (water=1): 2.68 pH: 6-10

Boiling Point (Degrees C): N/A Physical State: Sol.id
Freezing Point (Degrees C): 884 Vapor Density (air=1): N/A
Evaporation Rate (BuAc=1): N/A Percent Volatile by Volume:0
Viscosity: Odor: Odorless
Appearance: White crystals or powder

---

## SECTION X: STABILITY AND REACTIVITY

GENERAL:

STABILITY:
Stable: ☑
Unstable: ☐

HAZARDOUS POLYNERIZATION:
Will Not Occur: ☑
Will Occur: ☐

INCOMPATIBLE MATERIALS:
Strong oxidizing agents.

CONDITIONS TO AVOID:
Moisture

HAZARDOUS DECOMPOSITION PRODUCTS:
Oxides of sulfur.

---

## SECTION XI: TOXICOLOGIAL INFORMATION

GENERAL:
Sodium Sulfate, Anhydrous:
5989 mg/kg oral mouse LD50
Carcinogenicity: None identified
Reproductive Effects: None identified

CARCINOGENIC INFORMATION:

| Component | CAS# | Weight% | IARC | NTP | OSHA | ACGIH | Other |
|---|---|---|---|---|---|---|---|
| Sodium Sulfate Anhydrous | 7757-82-6 | 99-100 | No | No | No | No | No |

---

## SECTION XII: ECOLOGICAL INFORMATION

**Environmental Fate:**
When released into the soil, this material is expected to leach into groundwater. This material is not expected to significantly bioaccumulate.
**Environmental Toxicity:**
This material is not expected to be toxic to aquatic life. The LC50/96-hour values for fish are over 100 mg/l. The EC50/48-hour values for daphnia are over 100 mg/l.

---

## SECTION XIII: DISPOSAL CONSIDERATION

RCRA Hazard Class: None

METHOD OF DISPOSAL:

Dispose of in accordance with all applicable federal, state and local environmental regulations.

---

## SECTION XIIII: TRANSPORTATION INFORMATION

DOT (Department of Transportation)

| | |
|---|---|
| Proper Shipping Name: | Chemicals, n.o.s. (non-regulated) |
| Hazard Class: | None |
| Identification Number: | None / No UN Number assigned |

---

## SECTION XV: REGULATORY INFORMATION

TSCA (Toxic Substances Control Act):
In TSCA Inventory? Yes ☑ No ☐

CERCLA (Comprehensive Environmental Response Compensation, and Liability Act):
Classified as a Hazardous Substance? Yes ☐ No ☑

SARA TITLE III (Superfund Amendments and Reauthorization Act):
311/312 Hazard Categories:
Acute ☐ Chronic ☐ Flammability ☐ Pressure ☐ Reactivity ☐ None ☑

313 Reportable Ingredients: None

CALIFORNIA PROPOSITION 65: Not Listed

---

## SECTION XVI: OTHER INFORMATION

Saltex, LLC provides the information contained herein in good faith but makes no representation as to its comprehensiveness or accuracy. This document is intended only as a guide to the appropriate precautionary handling of the material by a properly trained person using this product. Individuals receiving the information must exercise their independent judgment in determining its appropriateness for a particular purpose.

***SALTEX, LLC MAKES NO REPRESENTATIONS, OR WARRANTIES, EITHER EXPRESS OR IMPLIED, INCLUDING WITHOUT LIMITATION ANY WARRANTIES OF MERCHANTABILITY, OR FITNESS FOR A PARTICULAR PURPOSE WITH RESPECT TO THE INFORMATION SET FORTH HEREIN OR THE PRODUCT TO WHICH THE INFORMATION REFERS. ACCORDINGLY, SALTEX, LLC WILL NOT BE RESPONSIBLE FOR DAMAGES RESULTING FROM USE OF OR RELIANCE UPON THIS INFORMATION.***

N/A: Not Available, Not Applicable
N/D: Not Determined
N/E: Not Established

# MATERIAL SAFETY DATA SHEET

# Sodium Carbonate

## Section 01 - Chemical And Product And Company Information

**Product Identifier** …….. Sodium Carbonate (Soda Ash)

**Product Use** ……..... Glass manufacture, detergent manufacture, sodium chemical manufacture, carbonate chemicals manufacture, pulp and paper, brine treatment,water hardness removal, pH adjustment in water or waste water, flue gas desulfurization, coal treatment, ion exchange resin regeneration.

**Supplier Name**…….…. ClearTech Industries Inc.
2302 Hanselman Avenue
Saskatoon, SK. Canada
S7L 5Z3

**Prepared By**.....……..….. ClearTech Industries Inc. Technical Department
Phone: (306)664-2522

**Preparation Date**.....…….….. February 28, 2011

**24-Hour Emergency Phone**…….... 306-664-2522

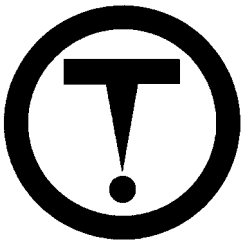

## Section 02 - Composition / Information on Ingredients

**Hazardous Ingredients**....……..... Sodium Carbonate 99.8-100%

**CAS Number**.....…….…….....Sodium Carbonate 497-19-8

**Synonym (s)**.....……...Disodium carbonate, calcined soda, soda ash, soda ash light, soda ash dense, carbonic acid, disodium salt, sodium carbonate anhydrous

CLEARTECH

## Section 03 - Hazard Identification

**Inhalation**..... May cause upper respiratory tract irritation.

**Skin Contact / Absorption**..... May cause redness, swelling from prolonged contact, especially in hot weather.

**Eye Contact**..... Causes irritation, may burn eyes.

**Ingestion**..... Low acute oral toxicity. May cause nausea, vomiting, diarrhea, irritation, and stomach ache.

**Exposure Limits**..... Treat as a nuisance particulate: TWA(OSHA): 5mg/$m^3$; TWA(Ontario Ministry of Labour): 10mg/$m^3$

## Section 04 - First Aid Measures

**Inhalation**..... Remove victim to fresh air. Give artificial respiration only if breathing has stopped. If breathing is difficult, give oxygen. Seek immediate medical attention.

**Skin Contact / Absorption**..... Remove contaminated clothing. Wash affected area with soap and water. Seek medical attention if irritation occurs or persists.

**Eye Contact**..... Flush immediately with water for at least 20 minutes. Forcibly hold eyelids apart to ensure complete irrigation of eye tissue. Seek immediate medical attention

**Ingestion**..... Do not induce vomiting. If vomiting occurs, lean victim forward to prevent breathing in vomitus. Give large amounts of water. Do not give anything by mouth to an unconscious or convulsing person. Seek immediate medical attention.

**Additional Information**..... While internal toxicity is low, irritant effects of high concentrations may produce corneal opacities, and vesicular skin reactions in humans with abraded skin only. Treatment is symptomatic and supportive.

## Section 05 - Fire Fighting

**Conditions of Flammability**..... Non flammable

**Means of Extinction**..... Product does not burn. Use appropriate extinguishing media for material that is supplying the fuel to the fire.

**Flash Point**..... Not applicable

**Auto-ignition Temperature**……. Not applicable

**Upper Flammable Limit** …….. Not applicable

**Lower Flammable Limit**...……..... Not applicable

**Hazardous Combustible Products**... Heating sodium carbonate liberates $CO_2$ and fumes of sodium oxide.

**Special Fire Fighting Procedures**..... Wear NIOSH-approved self-contained breathing apparatus and protective clothing.

**Explosion Hazards**……... Not applicable

## Section 06 - Accidental Release Measures

**Leak / Spill**.....…….... Sweep up and place in appropriate closed container. Clean up residual material by washing area with water. Avoid creation of dusty conditions. Do not flush to drain. Prevent material from entering public sewer system or waterways.

**Deactivating Materials**...……... Not available

## Section 07 - Handling and Storage

**Handling Procedures**.....…….... Use proper equipment for lifting and transporting all containers. Use sensible industrial hygiene and housekeeping practices. Wash thoroughly after handling. Avoid all situations that could lead to harmful exposure.

**Storage Requirements**.....……..….. Product is hygroscopic and tends to cake on storage. Store in a cool, dry well ventilated place. Keep container tightly closed away from acids and metals such as aluminum and magnesium.

## Section 08 - Personal Protection and Exposure Controls

### Protective Equipment

**Eyes**.…….……... Chemical goggles, full-face shield, or a full-face respirator is to be worn at all times when product is handled. Contact lenses should not be worn; they may contribute to severe eye injury.

**Respiratory**……... Respiratory protection is not normally required. If use creates dust formations, then a NIOSH approved respirator with a dust cartridge is recommended.

**Gloves**……..... Impervious gloves of chemically resistant material (rubber or PVC) should be worn at all times. Wash contaminated clothing and dry thoroughly before reuse.

**Clothing**……..……..... Body suits, aprons, and/or coveralls of chemical resistant material should be worn at all times. Wash contaminated clothing and dry thoroughly before reuse.

**Footwear**……..... No special footwear is required other than what is mandated at place of work.

### Engineering Controls

**Ventilation Requirements**……..... Mechanical ventilation (dilution or local exhaust), process or personnel enclosure and control of process conditions should be provided. Supply sufficient replacement air to make up for air removed by exhaust systems.

**Other**……..... Emergency shower and eyewash should be in close proximity.

## Section 09 - Physical and Chemical Properties

**Physical State**.....……...……... Solid

**Odor and Appearance**…..……... White granular solid, no odour

**Odor Threshold**...……..... Not applicable

**Specific Gravity (Water=1)**…….. 2.53 @ 20°C

**Vapor Pressure (mm Hg, 20C)**…….. Not applicable

**Vapor Density (Air=1)**..……..... Not applicable

**Evaporation Rate**.....……..…….. Not applicable

**Boiling Point**.....…….…..... Not available

**Freeze/Melting Point**....……..... 851°C

**pH**.....…….….. 11.3 (1% solution)

**Water/Oil Distribution Coefficient**.... Not available

**Bulk Density**.....…….….. 0.70-1.12g/cm$^3$

**% Volatiles by Volume**……..……... Not applicable

**Solubility in Water**..... 33.2%(w/w)

**Molecular Formula**..... $Na_2CO_3$

**Molecular Weight**..... 105.99

## Section 10 - Stability and Reactivity

**Stability**..... Stable under normal conditions. Avoid conditions of extreme heat (ie: temperatures greater than 400°C). Heating liberates fumes of sodium oxide.

**Incompatibility**..... Aluminium, fluorine, humid air, moisture, acids, magnesium, phosphorus pentaoxide, molten lithium, ammonia.

**Hazardous Products of Decomposition**.. Carbon dioxide and heat form from reaction with acids.

**Polymerization**..... Will not occur

## Section 11 - Toxicological Information

**Irritancy**..... Mild irritant. Skin and eye irritant.

**Sensitization**..... Non-sensitizing (humans, 0.25% sodium carbonate)

**Chronic/Acute Effects**..... May cause severe irritation of the eyes, including corneal opacities. Dusts and mists may be irritating to the skin, mucous membranes and upper respiratory tract. No significant acute toxicological effects expected.

**Synergistic Materials**..... Not available

**Animal Toxicity Data**..... $LD_{50}$(Rat, Oral): 4090mg/kg
$LC_{50}$(Rat, Inhalation, 2hr): 2.3mg/L

**Carcinogenicity**..... Not considered to be carcinogenic by IARC, NTP, ACGIH and OSHA

**Reproductive Toxicity**..... Not available

**Teratogenicity**..... Not available

**Mutagenicity**..... Not available

CLEARTECH

## Section 12 - Ecological Information

**Fish Toxicity**..... $TL_m$(48hr, Mosquito Fish): 840mg/L
$TL_m$(96hr, Mosquito Fish): 1200mg/L
$LC_{50}$(Daphina magna, 96hr): 265-565mg/L
$LC_{50}$(Bluegill sunfish, 96hr): 300-320mg/L

**Biodegradability**..... Not applicable

**Environmental Effects**……. Not available

## Section 13 - Disposal Consideration

**Waste Disposal**.....Dispose in accordance with all federal, provincial, and/or local regulations including the Canadian Environmental Protection Act.

## Section 14 - Transportation Information

**TDG Classification**

**Class**…… Not regulated

**Group**..... Not regulated

**PIN Number**..... Not regulated

**Other**……..... Secure containers (full and/or empty) with suitable hold down devises during shipment.

## Section 15 - Regulatory Information

**WHMIS Classification**.....D2, E

**NOTE: THE PRODUCT LISTED ON THIS MSDS HAS BEEN CLASSIFIED IN ACCORDANCE WITH THE HAZARD CRITERIA OF THE CANADIAN CONTROLLED PRODUCTS REGULATIONS. THIS MSDS CONTAINS ALL INFORMATION REQUIRED BY THOSE REGULATIONS.**

**NSF Certification**.....Product is certified under NSF/ANSI Standard 60 for corrosion/scale control and pH adjustment at a maximum dosage of 100mg/L (NOTE: NSF certification is only applicable for soda ash dense OCI labeled material in 22.7 kg bags).

CLEARTECH

## Section 16 - Other Information

**Note:** The responsibility to provide a safe workplace remains with the user. The user should consider the health hazards and safety information contained herein as a guide and should take those precautions required in an individual operation to instruct employees and develop work practice procedures for a safe work environment. The information contained herein is, to the best of our knowledge and belief, accurate. However, since the conditions of handling and use are beyond our control, we make no guarantee of results, and assume no liability for damages incurred by the use of this material. It is the responsibility of the user to comply with all applicable laws and regulations.

**Attention: Receiver of the chemical goods / MSDS coordinator**

As part of our commitment to the Canadian Association of Chemical Distributors (CACD) Responsible Distribution® initiative, ClearTech Industries Inc. and its associated companies require, as a condition of sale, that you forward the attached Material Safety Data Sheet(s) to all affected employees, customers, and end-users. ClearTech will send any available supplementary handling, health, and safety information to you at your request.

If you have any questions or concerns please call our customer service or technical service department.

## ClearTech Industries Inc. - Locations

**Corporate Head Office: 2302 Hanselman Avenue, Saskatoon, SK, S7L 5Z3**
**Phone: 306-664-2522**
**Fax: 306-665-6216**

**www.ClearTech.ca**

| Location | Address | Postal Code | Phone Number | Fax Number |
|---|---|---|---|---|
| Richmond, B.C. | 12431 Horseshoe Way | V7A 4X6 | 604-272-4000 | 604-272-4596 |
| Calgary, AB. | 5516E - 40th St. S.E. | T2C 2A1 | 403-279-1096 | 403-236-0989 |
| Edmonton, AB. | 11750 - 180th Street | T5S 1N7 | 780-452-6000 | 780-452-4600 |
| Saskatoon, SK. | 2302 Hanselman Avenue | S7L 5Z3 | 306-933-0177 | 306-933-3282 |
| Regina, SK. | 555 Henderson Drive | S42 5X2 | 306-721-7737 | 306-721-8611 |
| Winnipeg, MB. | 340 Saulteaux Crescent | R3J 3T2 | 204-987-9777 | 204-987-9770 |
| Mississauga, ON. | 7480 Bath Road | L4T 1L2 | 905-612-0566 | 905-612-0575 |

## 24 Hour Emergency Number - All Locations - 306-664-2522

# Klearwater Equipment & Technologies Corp.

## MATERIAL SAFETY DATA SHEET.

---

## Section 1. Chemical Product and Company Name.

| | |
|---|---|
| **Product Identification.** | **Isopac.** |
| **Chemical Identification.** | **Polyhydroxy Aluminum Chloride.** |
| **CAS Number.** | **1327 – 41 – 9.** |
| **Company Identification.** | **Klearwater Equipment & Technologies Corp.,**<br>**28 Sunset Close SE,**<br>**Calgary,**<br>**Alberta,**<br>**T2X 3A8**<br><br>**888 – 696 – 6561.** |
| **Product Use.** | **Chemical Coagulant and Flocculant.** |
| **Date of Preparation.** | **01 January, 2012.**<br>**Regulatory Affairs Officer.** |

---

## Section 2. Composition/Information on Ingredients.

| | |
|---|---|
| **Hazardous Ingredient.** | **Polyhydroxy Aluminum Chloride.**<br>**30 – 60 % (W/W%).**<br>**CAS No. - 1347 – 41 - 9.** |

---

## Section 3. Hazard Identification.

| | | |
|---|---|---|
| **Emergency Overview.** | **Corrosive, clear yellow liquid.**<br>**Avoid eye and skin contact.** | |
| **H.M.I.S. Rating.** | **Health** | **3.** |
| | **Flammability** | **0.** |
| | **Reactivity** | **0.** |
| **Potential Health Effects;** | **Eye** | **May cause severe irritation.** |
| | **Skin** | **May cause slight irritation.** |
| | **Inhalation** | **Irritation to mucous membranes.** |
| | **Ingestion** | **Irritation to mouth and stomach.** |
| | **Chronic Effects** | **No known chronic health effects.** |
| | **Carcinogenicity** | **No known cancer hazards.** |
| | **Reproductive Effects** | **No known reproductive effects.** |

## Section 4. First Aid Measures.

| | |
|---|---|
| **General.** | **If you feel unwell, seek medical advice and show product label, if possible.** |
| **Eye Contact.** | **Immediately flush with warm water for 15 minutes.<br>Lift upper and lower eye lids to ensure all chemical is completely removed.<br>Always obtain immediate medical attention.** |
| **Skin Contact.** | **Immediately remove all contaminated clothing, shoes and jewellery.<br>Wash infected area with warm water and soap for 15 minutes.<br>Obtain medical attention if irritation persists.** |
| **Inhalation.** | **Remove to fresh air and rest victim in half upright position.<br>Apply artificial respiration if indicated.<br>Always obtain medical attention.** |
| **Ingestion.** | **Do NOT induce vomiting.<br>Give large quantities of fluids to the conscious patient.<br>If the patient is unconscious, do not induce vomiting or give fluids.<br>Keep unconscious patient warm and seek medical attention.** |

---

## Section 5. Fire Fighting Measures.

| | | |
|---|---|---|
| **Flammable Properties;** | **COC Flash Point** | **N/A.** |
| | **Autoignition Temperature** | **N/A.** |
| | **Not considered flammable or combustible.** | |
| **Flammable Limits in Air;** | **LEL** | **N/A.** |
| | **UEL** | **N/A.** |
| **Extinguishing Media;** | **Water spray, fog or regular foam.<br>Agent appropriate for surrounding material.<br>Cool any exposed containers with water.** | |
| **Fire and Explosion Hazards;** | **Not sensitive to static discharge or mechanical impact.** | |
| **Combustion Products;** | **Hydrogen chloride and oxides of aluminum.** | |
| **Special Instructions;** | **Evacuate non-emergency personnel from the area.<br>Fire fighters should wear full protective gear.<br>Operate full faced SCBA in positive pressure mode.** | |

---

## Section 6. Accidental Release Measures.

| | |
|---|---|
| **Safeguards.** | **Restrict access to the area until clean-up is completed.<br>Wear adequate personnel protective equipment.** |

## Section 6. Accidental Release Measures (Continued).

| | |
|---|---|
| **Initial Containment.** | **Stop leak and contain spill if safe to do so.**<br>**DO NOT TOUCH SPILLED MATERIAL.** |
| **Small Spills.** | **Absorb with an inert material and flush with water.** |
| **Large Spills.** | **Prevent entry into sanitary sewers and confined areas.**<br>**Absorb with an inert material and collect for disposal.**<br>**Flush area with water.** |
| **Neutralizing Agent.** | **Lime, sodium carbonate, sodium bi-carbonate.**<br>**Note – Carbon dioxide will be evolved.** |
| **Waste Disposal.** | **Dispose according to local provincial/state or federal guidelines, laws, and regulations.** |

## Section 7. Handling and Storage.

| | |
|---|---|
| **Handling.** | **Observe all warning and precautions listed.**<br>**Handle in accordance with good industrial hygiene.**<br>**Avoid contact with eyes, skin and clothing.**<br>**Wash thoroughly after handling.** |
| **Storage.** | **Keep containers closed when not in use.**<br>**Keep containers dry and prevent freezing.**<br>**Keep away from incompatible materials.** |

## Section 8. Exposure Controls and Personal Protection.

| | |
|---|---|
| **Engineering Controls.** | **A good ventilation system will maintain employee exposure below airborne exposure limits.** |
| **Eye/Face Protection.** | **Splash resistant chemical goggles or face shield.**<br>**Maintain an eye wash fountain in handling area.** |
| **Skin Protection.** | **Wear impervious protective clothing.**<br>**Rubber boots and gloves are recommended.** |
| **Respiratory Protection.** | **Generally not required.**<br>**Use approved NIOSH/MSHA respirator with mist cartridge for high exposure situations.** |
| **Exposure Guidelines.** | **OSHA PEL 2 $mgm^{-3}$ (as Al)**<br>**ACGIH : TVL 2 $mg/m^3$ (as Al)** |

## Section 9. Physical and Chemical Properties.

| | |
|---|---|
| **Chemical Name.** | **Polyhydroxy Aluminum Chloride.** |
| **Chemical Family.** | **Inorganic Salt.** |
| **Molecular Formula.** | **$Al_2(OH)_xCl_{6-x}$. 0<X<6.** |
| **Molecular Weight.** | **130 – 180.** |
| **Appearance.** | **Clear amber/yellow liquid.** |
| **Odour.** | **Slight hydrochloric acid.** |
| **Relative Density.** | **1.35 – 1.39 (Water = 1)** |
| **pH.** | **< 1.0.** |
| **Boiling Point.** | **+105 $^0$ C.** |
| **Freezing Point.** | **- 20 $^0$ C.** |
| **Vapour Pressure.** | **18 mm Hg at 20 $^0$ C.** |
| **Vapour Density.** | **< 1 (Air = 1).** |
| **Solubility in Water.** | **Completely soluble.** |
| **% Volatiles.** | **> 50%.** |
| **Evaporation Rate.** | **Slow.** |

## Section 10. Stability and Reactivity.

| | |
|---|---|
| **Chemical Stability.** | **Stable at normal temperatures and pressure.** |
| **Conditions to Avoid.** | **None.** |
| **Incompatibilities.** | **Avoid contact with strong acids, bases, aluminum and zinc. Corrosive to stainless steels, mild steel, copper, nickel and brass.** |
| **Hazardous Decomposition.** | **Thermal decomposition products include hydrogen chloride and oxides of aluminum.** |
| **Hazardous Polymerization.** | **Will not occur.** |

## Section 11. Toxicological Information.

| | |
|---|---|
| **Polyhydroxy Aluminum Chloride.** | **No Data Available.** |
| **Aluminum Chloride Hydroxide. (base unit of polymer-monomer)** | **Irritation Data - 150 $mgm^{-3}$ intermittent skin-human.**<br>**Toxicity Data - 25 $mgm^{-3}$/6 hours**<br>**2 years intermittent inhalation - rat - $TCL_o$**<br>**- 25 $mgm^{-3}$/6 hours**<br>**2 years intermittent inhalation – guinea pig - $TCL_o$** |
| **Mutagenicity.** | **Not known.** |

## Section 12. Ecological Information.

| | |
|---|---|
| **Ecotoxicological Information.** | **Fish toxicity 10,000 $\mu gL^{-1}$ 24 week(s) mortality**<br>**Coho salmon, silver salmon (Oncorhynchus kisutch).** |
| **Persistence and Degradation.** | **No data available.** |

## Section 13. Disposal Considerations.

| | |
|---|---|
| **Waste Disposal.** | **Review local, provincial/state and federal regulations.**<br>**RCRA Hazardous if pH less than 2.0.** |
| **Miscellaneous.** | **Do not flush to sewer.** |

## Section 14. Transportation Information.

| | | |
|---|---|---|
| **Product Label.** | **Isopac.** | |
| **TDG Status (Canada)** | **Shipping Name.** | **Corrosive Liquid Acidic – Inorganic – N.O.S.** |
| | **Hazard Class.** | **8 - Corrosive liquid.** |
| | **Identification No.** | **UN 3264.** |
| | **Packing Group.** | **II.** |
| **DOT Status (USA)** | **Shipping Name.** | **Excepted under 49CFR173.154(d).** |
| | **Identification No.** | **UN 3264.** |
| **IATA/ICAO Status.** | **Hazard Class.** | **8.** |

## Section 15. Regulatory Information.

| | | |
|---|---|---|
| **WHMIS Hazard Symbols.** | **Class D-2(B)** | **Materials causing toxic effects.** |
| | **Class E** | **Corrosive Material.** |
| **Canadian Domestic Substance List.** | **Listed in the Canadian DSL.** | |
| **OSHA Classification.** | **29 CFR 1910.1200.** | |
| **Toxic Substance Control Act.** | **Listed under TSCA.** | |
| **NSF Certification.** | **Listed under Standard 60 - Certificate No. 0J750.**<br>**A maximum use level in potable water is 150 $mgL^{-1}$.** | |
| **ISO Certification.** | **ISO 9001-2000 and 14001-1996 Certified.**<br>**Certificate Numbers - 001720 – 2819 & 2899.** | |

## Section 16. Other Information.

**The data in this Material Safety Data Sheet relates only to the specific material designated herein.**

**The information contained herein is offered as a guide to the handling of this specific material and has been prepared in good faith by technically knowledgeable personnel. Every effort has been made to ensure that the data presented is current and factual. Numerical values reported represent nominal and/or typical properties and do not constitute specifications. It is not intended to be an all inclusive document and the manner and conditions of use and handling may involve other and additional considerations.**

**No warranty, or any other legal responsibility of any kind, is given or implied nor can any be construed from this document. Klearwater Equipment & Technologies Corp. will not be liable for any damages, losses, injuries or consequential damages that may result from the use of, or reliance on, information contained herein. Any use of the information presented herein must be determined by the user to be in accordance with applicable local, Provincial, State and Federal laws and regulations.**

**This Material Safety Data Sheet is valid for three years from 01 January, 2012.**

---

**********

**End of ISOPAC Material Safety Data Sheet.**

**********

CLEARTECH

# MATERIAL SAFETY DATA SHEET

# Aluminum Sulphate Solution

## Section 01 - Product And Company Information

**Product Identifier** …….. Aluminium sulphate solution

**Product Use** ……..... Coagulating agent in municipal and industrial water and wastewater treatment, additive in papermaking.

**Supplier Name**…….…. ClearTech Industries Inc.
1500 Quebec Avenue
Saskatoon, SK. Canada
S7K 1V7

**Prepared By**.....……..….. ClearTech Industries Inc. Technical Department
Phone: (306)664-2522

**Preparation Date**.....…….…. October 25, 2012

**24-Hour Emergency Phone**…….. 306-664-2522

## Section 02 - Composition / Information on Ingredients

**Hazardous Ingredients**....……..... Aluminum sulphate hydrate 45-55%

**CAS Number**.....……..... Aluminum sulphate hydrate 16828-12-9

**Synonym (s)**.....……...Liquid alum; aluminum sulfate solution; papermaker's alum; sulphuric acid, aluminum salt.

## Section 03 - Hazard Identification

**Inhalation**.....…….…... Inhalation of mists can be irritating to the respiratory tract and lungs.

**Skin Contact / Absorption**…….. Mild to moderate irritation can occur. Aluminum is very poorly absorbed through the skin and toxic effects would not be expected following short-term skin contact.

**Eye Contact**.....…….. May result in mild to moderate irritation to eyes.

**Ingestion**.....……. Amounts ingested incidental to industrial handling are not likely to cause injury. Large amounts may cause abdominal pain, nausea, vomiting. Can cause burns of the mouth, bleeding stomach, incoordination, muscle spasms, and kidney injury.

**Exposure Limits**…….. ACGIH/TLV-TWA= 2mg/$m^3$(Soluble Aluminum Salts)
OSHA/PEL-TWA= 2mg/$m^3$(Soluble Aluminum Salts)

## Section 04 - First Aid Measures

**Inhalation**.....…….. Remove victim to fresh air. Give artificial respiration only if breathing has stopped. If breathing is difficult, give oxygen. Seek immediate medical attention.

**Skin Contact / Absorption**…….. Remove contaminated clothing. Wash affected area with soap and water. Seek medical attention if irritation occurs or persists.

**Eye Contact**.....……... Flush immediately with water for at least 20 minutes. Forcibly hold eyelids apart to ensure complete irrigation of eye tissue. Seek immediate medical attention.

**Ingestion**.....……. Do not induce vomiting. If vomiting occurs, lean victim forward to prevent breathing in vomitus. Give large amounts of water. Do not give anything by mouth to an unconscious or convulsing person. Seek immediate medical attention.

**Additional Information**.....……... Not available

## Section 05 - Fire Fighting Measures

**Conditions of Flammability**……..... Non-flammable

**Means of Extinction**.....……... Product itself does not burn. However, decomposition product sulfur trioxide will react with water to form sulfuric acid. Use appropriate extinguishing agent.

**Flash Point**.....……. Not applicable

**Auto-ignition Temperature**……. Not applicable

**Upper Flammable Limit** …….. Not applicable

**Lower Flammable Limit**...……..….. Not applicable

**Hazardous Combustible Products**... Under fire conditions (or at temperatures greater than 650°C), product decomposes to give off sulfur trioxide, an oxidizing agent which will support combustion.

**Special Fire Fighting Procedures**..... Wear NIOSH-approved self-contained breathing apparatus and protective clothing.

**Explosion Hazards**……... Liquid alum may react with some metals, to give flammable, potentially explosive hydrogen gas. Hydrogen gas can accumulate to explosive concentrations inside confined spaces. Follow appropriate NFPA codes.

## Section 06 - Accidental Release Measures

**Leak / Spill**.....…….. Wear appropriate personal protective equipment. Ventilate area. Stop or reduce leak if safe to do so. Prevent material from entering sewers. Cover spill with dry earth, sand or other non-combustible material.

**Deactivating Materials**...……..…... Lime, limestone, soda ash, sodium bicarbonate, dilute sodium hydroxide or dilute aqua ammonia.

## Section 07 - Handling and Storage

**Handling Procedures**.....…….. Use proper equipment for lifting and transporting all containers. Use sensible industrial hygiene and housekeeping practices. Wash thoroughly after handling. Avoid all situations that could lead to harmful exposure.

**Storage Requirements**.....……...….. Store in a cool, dry, well-ventilated place. Keep container tightly closed, and away from incompatible materials. Store at temperatures below 40°C and above 0°C.

## Section 08 - Personal Protection and Exposure Controls

### Protective Equipment

**Eyes**.……... Chemical goggles, full-face shield, or a full-face respirator is to be worn at all times when product is handled. Contact lenses should not be worn; they may contribute to severe eye injury.

**Respiratory**……... A NIOSH/MSHA approved air-purifying respirator equipped with acid gas/fume, mist cartridges for concentrations up to 20 mg/m$^3$. An air-supplied respirator if concentrations are higher or unknown.

**Gloves**……..... Impervious gloves of chemically resistant material (rubber or PVC) should be worn at all times. Wash contaminated clothing and dry thoroughly before reuse.

**Clothing**……..……..... Body suits, aprons, and/or coveralls of chemical resistant material should be worn at all times. Wash contaminated clothing and dry thoroughly before reuse.

**Footwear**……..... Impervious boots of chemically resistant material should be worn at all times.

### Engineering Controls

**Ventilation Requirements**……..... Mechanical ventilation (dilution or local exhaust), process or personnel enclosure and control of process conditions should be provided. Supply sufficient replacement air to make up for air removed by exhaust systems.

**Other**……..... Emergency shower and eyewash should be in close proximity.

## Section 09 - Physical and Chemical Properties

**Physical State**.....……...……... Liquid

**Odor and Appearance**…..…….. Pale straw coloured, clear odourless liquid.

**Odor Threshold**....……..... Not available

**Specific Gravity (Water=1)**…….. 1.335

**Vapor Pressure (mm Hg, 20C)**……. Not available

**Vapor Density (Air=1)**..……..... Not available

**Evaporation Rate**.....……..……. Not available

**Boiling Point**.....…….…..... 101ºC

**Freeze/Melting Point**....……..... -16°C

**pH**.....…….…. 1.9-2.3

**Water/Oil Distribution Coefficient**.... Not available

**Bulk Density**.....…….. Not available

**% Volatiles by Volume**……..……... Not available

**Solubility in Water**...……..... Completely miscible

**Molecular Formula**.....……..... $Al_2(SO_4)_3$ $14H_2O$

**Molecular Weight**.....……..... 594.14

## Section 10 - Stability and Reactivity

**Stability**.....……...……. Stable under normal conditions.

**Incompatibility**.....……..…….. Corrosive to carbon steel, aluminum, and zinc. Reacts with strong bases to form aluminum hydroxide.

**Hazardous Products of Decomposition**.. May react with many metals including carbon steel and aluminum to form flammable gases including sulphur oxides and hydrogen. Liquid alum is stable below 60°C.

**Polymerization**.....…….…… Will not occur

## Section 11 - Toxicological Information

**Irritancy**.....……..……. Corrosive

**Sensitization**.....…….....…….. Not available

**Chronic/Acute Effects**……...…….. Skin irritation may be aggravated in individuals with existing skin lesions. Breathing of vapors or sprays (mists) may aggravate acute or chronic asthma and chronic pulmonary disease such as emphysema and bronchitis.

**Synergistic Materials**...……...……... Not available

**Animal Toxicity Data**.....…..…….. $LD_{50}$(mouse,oral)= >9000 mg/kg
$LD_{50}$(rat,oral)= >9000 mg/kg

**Carcinogenicity**.....…….....……... Sulfuric acid mist: Classified 1 (Proven for humans) by IARC, 1 (Known to be human carcinogens) by NTP

Sulfuric acid mist: Classified A2 (Suspected for humans) by ACGIH

**Reproductive Toxicity**..…...……... Not available

**Teratogenicity**.....…....……... Not available

**Mutagenicity**.....……....……. Not available

## Section 12 - Ecological Information

**Fish Toxicity**.....…….. $LD_{50}$(72 hrs, goldfish)= 100mg/L

**Biodegradability**.....…….…... The products of biodegradation are more toxic than the original product.

**Environmental Effects**……. May be harmful to aquatic life. Toxicity is primarily associated with the acidic pH. Acidic soil conditions develop where contamination with this material occurs.

## Section 13 - Disposal Consideration

**Waste Disposal**.....…...…….. Dispose in accordance with all federal, provincial, and/or local regulations including the Canadian Environmental Protection Act.

## Section 14 - Transport Information

**TDG Classification**

**Class**……..……..…... 8

**Group**.....…….....…….. III

**PIN Number**.....……..…….. UN 3264

**Other**……... Secure containers (full and/or empty) with suitable hold down devises during shipment.

## Section 15 - Regulatory Information

**WHMIS Classification**.....……....E

**NOTE: THE PRODUCT LISTED ON THIS MSDS HAS BEEN CLASSIFIED IN ACCORDANCE WITH THE HAZARD CRITERIA OF THE CANADIAN CONTROLLED PRODUCTS REGULATIONS. THIS MSDS CONTAINS ALL INFORMATION REQUIRED BY THOSE REGULATIONS.**

**NSF Certification**.....Product is certified under NSF/ANSI Standard 60 for coagulation and flocculation at a maximum dosage of 330mg/L.

## Section 16 - Other Information

**Note:** The responsibility to provide a safe workplace remains with the user. The user should consider the health hazards and safety information contained herein as a guide and should take those precautions required in an individual operation to instruct employees and develop work practice procedures for a safe work environment. The information contained herein is, to the best of our knowledge and belief, accurate. However, since the conditions of handling and use are beyond our control, we make no guarantee of results, and assume no liability for damages incurred by the use of this material. It is the responsibility of the user to comply with all applicable laws and regulations.

**Attention: Receiver of the chemical goods / MSDS coordinator**

As part of our commitment to the Canadian Association of Chemical Distributors (CACD) Responsible Distribution® initiative, ClearTech Industries Inc. and its associated companies require, as a condition of sale, that you forward the attached Material Safety Data Sheet(s) to all affected employees, customers, and end-users. ClearTech will send any available supplementary handling, health, and safety information to you at your request.

If you have any questions or concerns please call our customer service or technical service department.

## ClearTech Industries Inc. - Locations

**Corporate Head Office: 1500 Quebec Avenue, Saskatoon, SK, S7K 1V7**
**Phone: 306-664-2522**
**Fax: 306-665-6216**

**www.ClearTech.ca**

| Location | Address | Postal Code | Phone Number | Fax Number |
|---|---|---|---|---|
| Richmond, B.C. | 12431 Horseshoe Way | V7A 4X6 | 604-272-4000 | 604-272-4596 |
| Calgary, AB. | 5516E - 40th St. S.E. | T2C 2A1 | 403-279-1096 | 403-236-0989 |
| Edmonton, AB. | 11750 - 180th Street | T5S 1N7 | 780-452-6000 | 780-452-4600 |
| Saskatoon, SK. | 19 Peters Ave, North Corman Park | S7L 5Z3 | 306-933-0177 | 306-933-3282 |
| Regina, SK. | 555 Henderson Drive | S42 5X2 | 306-721-7737 | 306-721-8611 |
| Winnipeg, MB. | 340 Saulteaux Crescent | R3J 3T2 | 204-987-9777 | 204-987-9770 |
| Mississauga, ON. | 7480 Bath Road | L4T 1L2 | 905-612-0566 | 905-612-0575 |

# 24 Hour Emergency Number - All Locations - 306-664-2522

**Safety Data Sheet dated 11/30/2010, version 1**

## 1. IDENTIFICATION OF THE SUBSTANCE/PREPARATION AND OF THE COMPANY

Trade name:
Trade code: **ANP4MLB**
Product type and use: anionic polyacrylamide / flocculant
Company:

Verve Energy Solutions Inc.
Suite 330, 600 6th Ave. S.W.
Calgary AB T2P 0S5
Tel: 403-589-2151

Emergency telephone number of the company and/or of an authorised advisory centre:

For Chemical Emergency Spill Leak Fire Exposure or Accident
Call CHEMTREC Day or Night
DOMESTIC NORTH AMERICA 800-424-9300
INTERNATIONAL, CALL 703-527-3887 (collect calls accepted)

## 2. HAZARDS IDENTIFICATION

**APPEARANCE AND ODOR:**

Color: white
Appearance: crystalline powder
Odor: odorless

**STATEMENTS OF HAZARD:**

WARNING: causes skin irritation, may cause eye irritation

**POTENTIAL HEALTH EFFECTS:**

EFFECTS OF EXPOSURE:

Acute oral (rat) and dermal (rabbit) LD50 values are estimated to be greater than 2,500 mg/Kg and greater than 10,000 mg/Kg, respectively. The 4-hour inhalation LC50 (rat) value is estimated to be greater than 20 mg/L. Direct contact with this material can cause moderate skin and mild eye irritation. Refer to section 11 for toxicology information on the regulated components on this product.

## 3. COMPOSITION/INFORMATION ON INGREDIENTS

**OSHA REGULATED COMPONENTS**

No Permissible Exposure Limits (PEL/TLV) heve been established by OSHA or ACGIH.

## 4. FIRST AID MEASURES

Contact with skin:

Wash with plenty of water and soap.

Contact with eyes:

Wash immediately with water for at least 15 minutes. If there is any irritation OBTAIN IMMEDIATELY MEDICAL ATTENTION.

Swallowing:

Do not induce vomiting. Do not give anything to an unconscious person. Check for breathing and pulse, if present, place in the recovery position and obtain medical attention. If conscious rinse out the mouth with water. Give ¾ of liter of water to drink immediately and repeat drinks of water at a rate of a cupful (approx. 250 mL) every 10 minutes.

SEEK A MEDICAL EXAMINATION IMMEDIATELY and present the safety data sheet.

Inhalation:

Ventilate the premises. The patient is to be removed immediately from the contaminated premises and made to rest in a well ventilated area. Should the patient feel unwell, OBTAIN MEDICAL ATTENTION.

## 5. FIRE-FIGHTING MEASURES

Recommended extinguishers:

CO2, Foam, Chemical powders, according to the materials involved in the fire. Avoid to use spraied water, because of the slippery properties of the wet product.

Extinguishers not to be used:

None in particular.

Risks arising from combustion:

Avoid inhaling the fumes.

Protective equipment:

Firefighters, and others exposed, use protection for the respiratory tract.

## 6. ACCIDENTAL RELEASE MEASURES

Measures for personal safety:

Use gloves and protective clothing. Avoid dust formation. Wear protective dust mask.

Enviromental measures:

Limit leakages with earth or sand.

If the product has escaped into a watercourse, into the drainage system, or has contaminated the ground or vegetation, notify the competent authorities.

Cleaning methods:

Sweep up and shovel into a suitable container for disposal.

Residues or small spillages should be hosed away completely with plenty of water. Spilled product which becomes wet or spilled aqueous solution create a hazard because of the slippery nature.

The spillage should be contained with earth or sand and removed for disposal.

## 7. HANDLING AND STORAGE

Handling precautions:

As with many organic powders flammable dust clouds may be formed. Avoid creating dust and keep away from sources of ignition. Do not breathe dust.

Do not eat, drink or smoke while working. Remove contaminated clothing immediately and launder before reuse. Wash hands after use.

Incompatible materials:

None in particular. Material is hygroscopic and should not be exposed to moisture.

Storage conditions:
Instructions as regards storage premises:
Store the product in a well-ventilated area, dry place. Avoid wet and humid conditions. Avoid extremes of temperature. Maintain good housekeeping to control accumulations.

## 8. EXPOSURE CONTROLS/PERSONAL PROTECTION

Precautionary measures:
Give adequate ventilation to the premises where the product is stored and/or handled. Provide appropriate exhaust ventilation at places where dust is formed.
Respiratory protection:
Where exposures are below the established limit, no respiratory protection is required. Where exposures exceed the established exposure limit, use respiratory protection recommended for the material and level of exposure.
Protection for hands:
Use protective gloves in P.V.C., or in plastic material/rubber.
Eye protection:
Use protective goggles.
Protection for skin:
Wear lightweight protective clothing.
Exposure limits (ACGIH):
Exposure limits of the substances contained: the parameters to refer to the product just as.
10 $mg/m^3$ - 8 hour TWA total inhalable dust
4 $mg/m^3$ - 8 hour TWA total respirable dust

## 9. PHYSICAL AND CHEMICAL PROPERTIES

| | |
|---|---|
| Colour: | white powder |
| Appearance: | crystalline powder |
| Odour: | odorless |
| pH: | not available |
| Melting point: | not applicable |
| Boiling point: | not applicable |
| Flash point: | not applicable |
| Solid/gas flammability: | not available |
| Explosive properties: | not applicable |
| Oxidizing properties: | not applicable |
| Vapour pressure: | not applicable |
| Relative density: | 600 - 900 $Kg/m^3$ |
| Solubility in water: | limited by viscosity |
| Vapor density: | not applicable |
| Percent Volatile (% by wt): | 10 – 15 % |
| Saturation in air (% by vol): | not applicable |
| Evaporation rate: | not applicable |
| Volatile organic content: | not applicable |
| Autoignition temperature | > 150℃ |
| Decomposition temperature: | > 150℃ |
| Partition coefficient: (n-octanol/water) | not available |
| Odor threshold: | not available |

## 10. STABILITY AND REACTIVITY

Conditions to avoid:
Stable at room temperature. Follow the industrial hygiene norms as for the handling and storage of chemicals. Avoid extremes of temperature and wet and humid conditions.
Substances to avoid:
Avoid contact with reactive chemicals.
Hazardous decomposition products:
In case of combustion there is development of CO, $CO_2$, $NO_x$, $NH_3$

## 11. TOXICOLOGICAL INFORMATION

The concentration of each substance should be borne in mind in assessing the toxicological effects deriving from the preparation.
Toxicological information for the product is found under section 3 (HAZARD IDENTIFICATION).
California Proposition 65 Warning (applicable in California only)- this product contains a chemical known to the state of California to cause cancer.

## 12. ECOLOGICAL INFORMATION

No adverse environmental effects are expected with proper use and dispoal of this product.
Acute Toxicity tests conducted using environmentally representative water gave the following results:

**ALGAE TEST RESULTS**
Test: Growth Inhibition (OECD 201)
Duration: 72 h
Species: Green Algae (Selenastrum capricornutum)> 100 mg/Lt IC50
Information based on a structurally similar material.

**FISH TEST RESULTS**
Test: acute toxicity, fresh water (OECD 203)
Duration: 96 hr
Species: zebra fish (brachydanio rerio) > 100 mg/L LC50
Information based on a structurally similar material.

**INVERTEBRATE TEST RESULTS**
Test: acute immobilization (OECD 202)
Duration: 48 hr
Species: water flea (daphnia magna) > 100 mg/LEC50
Information based on a structurally similar material.

The polymeric ingredient is not readily biodegradable, but degradable by hydrolysis. The large polymer size is incompatible with transport across biological membranes and diffusion; the bioconcentration factor is therefore considered to be zero.

## 13. DISPOSAL CONSIDERATIONS

Recover if possible. In so doing, comply with the local and national regulations currently in force.
Hazardous waste classification under federal regulation (40 CFR Part 261 et seq) is dependent upon wheter a material is a RCRA 'listed hazardous waste' or has any of the four RCRA 'hazardous waste characteristics'. Refer to 40 CFR Part 261.33 to determine if a given material to be disposed of is a RCRA 'listed hazardous waste'; information contained in Section 15 of this MSDS is not intended

to indicate if the product is a 'listed hazardous waste'. RCRA 'hazardous waste characteristic: there are four characteristics defined in 40 CFR Section 261.21-61.24: Ignitability, Corrosivity, Reactivity, and Toxicity. To determine Ignitability, see Section 9 of this MSDS (flash point). For Corrosivity, see Section 9 and 14 (pH and DOT corrosivity). For Reactivity, see Section 10 (incompatible materials). For toxicity, see Section 2 (composition). Federal regulations are subject to change. State and local requirements, which may differ from or be more stringent than the federal regulation, may also apply to the classification of the material if it is to be disposed.

## 14. TRANSPORT INFORMATION

**US DOT**
Proper shipping name: NOT APPLICABLE/NOT REGULATED
Hazardous Substances: NOT APPLICABLE

**TRANSPORT CANADA**
Proper shipping name: NOT APPLICABLE/NOT REGULATED

**ICAO/IATA**
Proper shipping name: NOT APPLICABLE/NOT REGULATED
Packing Instruction/maximum Net Quantity Per Package: -
Passenger aircraft:-
Cargo aircraft:-

**IMO**
Proper shipping name: NOT APPLICABLE/NOT REGULATED

## 15. REGULATORY INFORMATION

**United States (USA):** All components of this product are included on the TSCA Chemical Inventory or are not required to be listed on the TSCA Chemical Inventory.

**Canada:** All components of this product are included on the Domestic Substances List (DSL) or are not required to be listed on the DSL.

**European Union (EU):** All componenst of this product are included on the European Inventory of Existing Chemical Substances (EINECS) or are not required to be listed on EINECS:

**OTHER ENVIROMENTAL INFORMATION**
The following components of this product may be subject to reporting requirements pursuant to Section 313 of CERCLA (40 CFR 372), Section 12(b) of TSCA, or may be subject to release reporting requirements (40 CFR 307, 40 CFR 311, etc). See section 13 for information on waste classification and waste disposal of this product.

This product does not contain any components regulated under these section of the EPA

**PRODUCT HAZARD CLASSIFICATION UNDER SECTION 311 OF SARA**

- Not applicable

## 16. OTHER INFORMATION

NFPA Hazard Rating (National Fire Association)

Health: 0
Fire: 1
Reactivity: 0

# MATERIAL SAFETY DATA SHEET

# Sulphuric Acid

## Section 01 - Product And Company Information

**Product Identifier** …….. Sulphuric Acid 70-100%

**Product Use** ……..... Used in manufacture of fertilizers, explosives, other acids, metal pickling, petroleum processing, lead storage batteries.

**Supplier Name**…….…. ClearTech Industries Inc.
1500 Quebec Avenue
Saskatoon, SK. Canada
S7K 1V7

**Prepared By**.....……..….. ClearTech Industries Inc. Technical Department
Phone: (306)664-2522

**Preparation Date**.....…….….. February 7, 2013

**24-Hour Emergency Phone**…….. 306-664-2522

## Section 02 - Composition / Information on Ingredients

**Hazardous Ingredients**....……..... Sulphuric Acid 70-100%

**CAS Number**.....…….…….... Sulphuric Acid 7664-93-9

**Synonym (s)**.....……...Battery electrolyte, battery fluid, fertilizer acid, electrolyte acid, hydrogen sulphate, oil of vitriol, spirit of sulphur

CLEARTECH

## Section 03 - Hazard Identification

**Inhalation**..... Inhalation of the mist may produce severe irritation of respiratory tract, characterized by coughing, choking, or shortness of breath. Over-exposure by inhalation may cause respiratory irritation, coughing and aggravate acute or chronic pulmonary diseases such as emphysema and bronchitis. May be fatal if inhaled.

**Skin Contact / Absorption**..... Very hazardous when in contact with skin. Non-sensitizer to skin. Skin contact may produce burns. Severe over-exposure can result in death. Skin inflammation is characterized by itching, scaling, reddening or blistering.

**Eye Contact**..... Very hazardous when in contact with eyes. Inflammation of the eye is characterized by redness, watering and itching. Immediate pain, severe burns and corneal damage, which may result in permanent blindness can occur.

**Ingestion**..... Very hazardous if injested. May be fatal if swallowed. May cause burns to mouth, throat and stomach. Prolonged exposure can result in erosion and discoloration of teeth, chronic irritation of the nose eyes throat and respiratory tract.

**Exposure Limits**..... ACGIH/TLV-TWA: 0.2mg/$m^3$
ACGIH/TLV-STEL: 3mg/$m^3$
OSHA/TLV-TWA: 1mg/$m^3$

## Section 04 - First Aid Measures

**Inhalation**..... Remove victim to fresh air. Give artificial respiration only if breathing has stopped. If breathing is difficult, give oxygen. Seek immediate medical attention.

**Skin Contact / Absorption**..... Remove contaminated clothing. Wash affected area with soap and water. Seek medical attention if irritation occurs or persists.

**Eye Contact**..... Check for and remove any contact lenses. Flush immediately with water for at least 20 minutes. Forcibly hold eyelids apart to ensure complete irrigation of eye tissue. Seek immediate medical attention.

**Ingestion**..... Do not induce vomiting. If vomiting occurs, lean victim forward to prevent breathing in vomitus. Give ½ to full glass of water to dilute if victim is alert. Do not give anything by mouth to an unconscious or convulsing person. Vomiting may need to be induced, but should be directed by a physician. Seek immediate medical attention. Seek immediate medical attention.

**Additional Information**.....…….. This product contains materials that may cause severe pneumonitis if aspirated. If ingestion has occurred less than 2 hours earlier, carry out careful gastric lavage; use endotracheal cuff if available, to prevent aspiration. Observe patient for respiratory difficulty from aspiration pneumonitis. Give artificial resuscitation and appropriate chemotherapy if respiration is depressed. Following exposure the patient should be kept under medical review for at least 48 hours as delayed pneumonitis may occur.

## Section 05 - Fire Fighting Measures

**Conditions of Flammability**……..... Non-flammable

**Means of Extinction**.....……..... Product does not burn. Do not add water to the acid. Use dry chemical to extinguish the surrounding fire. Strong dehydrating agent, which may cause ignition of finely divided combustible materials on contact.

**Flash Point**....……. Not applicable

**Auto-ignition Temperature**……. Not applicable

**Upper Flammable Limit** …….. Not applicable

**Lower Flammale Limit**...…….…..... Not applicable

**Hazardous Combustible Products**... Sulphur dioxide, sulphur trioxide, sulphuric acid fumes

**Special Fire Fighting Procedures**..... Wear NIOSH-approved self-contained breathing apparatus and protective clothing.

**Explosion Hazards**……... Reacts violently with water with the evolution of heat. It can react explosively with organic materials. Reacts with many metals to liberate hydrogen gas that can form explosive mixtures. Hydrogen, a highly flammable gas, can accumulate to explosive concentrations inside drums, types of steel containers or tanks upon storage. Oxides of sulphur may be produced in fire.

## Section 06 - Accidental Release Measures

**Leak / Spill**.....…..…….. Wear appropriate personal protective equipment. Ventilate area. Stop or reduce leak if safe to do so. Prevent material from entering sewers. Cover spill with soda ash and discard waste into plastic or plastic lined containers. Flush are with water to remove any residue.

**Deactivating Materials**..... Lime, limestone, sodium carbonate (soda ash), sodium bicarbonate, dilute sodium hydroxide.

## Section 07 - Handling and Storage

**Handling Procedures**..... Use proper equipment for lifting and transporting all containers. Use sensible industrial hygiene and housekeeping practices. Wash thoroughly after handling. Avoid all situations that could lead to harmful exposure.

**Storage Requirements**..... Store in a cool, dry, well-ventilated place. Keep container tightly closed and away from incompatible materials. Metal and, specifically carbon steel storage tanks must be vented due to hydrogen release.

## Section 08 - Personal Protection and Exposure Controls

### Protective Equipment

**Eyes**..... Chemical goggles, full-face shield, or a full-face respirator is to be worn at all times when product is handled. Contact lenses should not be worn; they may contribute to severe eye injury.

**Respiratory**..... Use NIOSH-approved respirator-full facepiece with cartridges (acid-gas and mists up to 10mg/m$^3$) or self-contained breathing apparatus if concentrations are higher or unknown.

**Gloves**..... Impervious gloves of chemically resistant material (neoprene, rubber or PVC) should be worn at all times. Wash contaminated clothing and dry thoroughly before reuse.

**Clothing**..... Body suits, aprons, and/or coveralls of chemical resistant material should be worn at all times. Wash contaminated clothing and dry thoroughly before reuse.

**Footwear**..... Impervious boots of chemically resistant material should be worn at all times.

### Engineering Controls

**Ventilation Requirements**..... Mechanical ventilation (dilution or local exhaust), process or personnel enclosure, and control of process conditions. Supply sufficient replacement air to make up for air removed by exhaust systems.

**Other**..... Emergency shower and eyewash should be in close proximity.

CLEARTECH

## Section 09 - Physical and Chemical Properties

**Physical State**..... Liquid

**Odor and Appearance**..... Clear, colorless liquid with no odour

**Odor Threshold**..... Not available

**Specific Gravity (Water=1)**..... 1.500-1.844 at 15.6°C

**Vapor Pressure (mm Hg, 20°C)**..... < 0.3 mm Hg at 25°C

**Vapor Density (Air=1)**..... 3.4

**Evaporation Rate**..... Not available

**Boiling Point**..... 140°C (60%), 279°C (93%)

**Freeze/Melting Point**..... ~ -29°C (60%), -29.5°C (93.19%)

**pH**..... < 1.0

**Water/Oil Distribution Coefficient**.... Not available

**Bulk Density**..... Not available

**% Volatiles by Volume**..... Not available

**Solubility in Water**..... Miscible in water, liberates heat

**Molecular Formula**..... $H_2SO_4$

**Molecular Weight**..... 98.08

## Section 10 - Stability and Reactivity

**Stability**..... Stable under normal conditions.

**Incompatibility**..... Highly reactive with materials such as metals, metal oxides, hydroxides, nitrates, amines, carbonates and other alkaline materials.

**Hazardous Products of Decomposition**... Toxic fumes of oxides of sulphur when heated to decomposition. Will react with water or steam to produce toxic and corrosive fumes. Reacts with carbonates to generate carbon dioxide gas, and with cyanides and sulfides to form poisonous hydrogen cyanide and hydrogen sulphide respectively.

**Polymerization**..... Will not occur

## Section 11 - Toxicological Information

**Irritancy**..... Severe skin and eye irritant.

**Sensitization**..... Not available

**Chronic/Acute Effects**..... Potential chronic effects may occur with long term exposure to sulfuric acid mist, which is classified A2 by ACGIH. See **Carcinogenicity** section for further details.

**Synergistic Materials**..... Not available

**Animal Toxicity Data**..... $LD_{50}$(Oral, Rat)= 2140mg/kg
$LC_{50}$(Inhalation, Rat)= 510mg/$m^3$

**Carcinogenicity**..... IARC has classified "strong inorganic acid mists containing sulphuric acid" as a known human carcinogen, (IARC category 1). This classification applies only to mists containing sulphuric acid and not to sulphuric acid or sulphuric acid solutions.

**Reproductive Toxicity**..... Investigated as a reproductive effector

**Teratogenicity**..... Not available

**Mutagenicity**..... Not available

## Section 12 - Ecological Information

**Fish Toxicity**..... $LC_{50}$(Rainbow trout,96 hour)= 0.0028mg/L

**Biodegradability**..... The products of biodegradation are more toxic than the original product.

**Environmental Effects**..... When released into the soil, this material may leach into groundwater. When released into the air, this material may be removed from the atmosphere to a moderate extent by wet deposition. When released into the air, this material may be removed from the atmosphere to a moderate extent by dry deposition.

## Section 13 - Disposal Consideration

**Waste Disposal**..... Dispose in accordance with all federal, provincial, and/or local regulations including the Canadian Environmental Protection Act.

## Section 14 - Transport Information

**TDG Classification**

**Class**……..……..…... 8

**Group**.....…….....……... II

**PIN Number**.....……..……... UN 1830

**Other**……... Secure containers (full and/or empty) with suitable hold down devises during shipment and ensure all caps, valves, or closures are secured in the closed position.

## Section 15 - Regulatory Information

**WHMIS Classification**.....……....D1, E

**NOTE: THE PRODUCT LISTED ON THIS MSDS HAS BEEN CLASSIFIED IN ACCORDANCE WITH THE HAZARD CRITERIA OF THE CANADIAN CONTROLLED PRODUCTS REGULATIONS. THIS MSDS CONTAINS ALL INFORMATION REQUIRED BY THOSE REGULATIONS.**

**NSF Certification**.....Product is certified under NSF/ANSI Standard 60 for scale control and pH adjustment at a maximum dosage of 200mg/L (note: only sulphuric acid 93% has NSF certification).

## Section 16 - Other Information

**Note:** The responsibility to provide a safe workplace remains with the user. The user should consider the health hazards and safety information contained herein as a guide and should take those precautions required in an individual operation to instruct employees and develop work practice procedures for a safe work environment. The information contained herein is, to the best of our knowledge and belief, accurate. However, since the conditions of handling and use are beyond our control, we make no guarantee of results, and assume no liability for damages incurred by the use of this material. It is the responsibility of the user to comply with all applicable laws and regulations.

**Attention: Receiver of the chemical goods / MSDS coordinator**

As part of our commitment to the Canadian Association of Chemical Distributors (CACD) Responsible Distribution® initiative, ClearTech Industries Inc. and its associated companies require, as a condition of sale, that you forward the attached Material Safety Data Sheet(s) to all affected employees, customers, and end-users. ClearTech will send any available supplementary handling, health, and safety information to you at your request.

If you have any questions or concerns please call our customer service or technical service department.

CLEARTECH

## ClearTech Industries Inc. - Locations

**Corporate Head Office: 1500 Quebec Avenue, Saskatoon, SK, S7K 1V7**
**Phone: 306-664-2522**
**Fax: 306-665-6216**

**www.ClearTech.ca**

| Location | Address | Postal Code | Phone Number | Fax Number |
|---|---|---|---|---|
| Richmond, B.C. | 12431 Horseshoe Way | V7A 4X6 | 604-272-4000 | 604-272-4596 |
| Calgary, AB. | 5516E - 40th St. S.E. | T2C 2A1 | 403-279-1096 | 403-236-0989 |
| Edmonton, AB. | 11750 - 180th Street | T5S 1N7 | 780-452-6000 | 780-452-4600 |
| Saskatoon, SK. | 19 Peters Ave, North Corman Park | S7K 1V7 | 306-933-0177 | 306-933-3282 |
| Regina, SK. | 555 Henderson Drive | S42 5X2 | 306-721-7737 | 306-721-8611 |
| Winnipeg, MB. | 340 Saulteaux Crescent | R3J 3T2 | 204-987-9777 | 204-987-9770 |
| Mississauga, ON. | 7480 Bath Road | L4T 1L2 | 905-612-0566 | 905-612-0575 |

## 24 Hour Emergency Number - All Locations - 306-664-2522