DRAWING LIST		
GROUP	DRAWING NUMBER	DESCRIPTION
A. COVER	0001	DRAWING LIST (1 OF 2)
	0002	STANDARD ELECTRICAL DETAIL (2 OF 2)
B. BUILDING LAYOUT	0010	BUILDING LAYOUT (X OF X)
C. POWER	0050	LOAD LIST (1 OF 9)
	0070	PANEL SCHEDULE (2 OF 9)
	0080 - 0083	SINGLE LINE DIAGRAM (3-6 OF 9)
	0100 - 0200	THREE LINE DIAGRAM (7-9 OF 9)
D. CONTROLS	1000 - 1100	CONTROL POWER WIRING (1-3 OF 10)
	2000 - 2050	DISCRETE INPUT WIRING DIAGRAM (4-5 OF 10)
	3000	DISCRETE OUTPUT WIRING DIAGRAM (6 OF 10)
	4000 - 4050	ANALOG INPUT WIRING DIAGRAM (7-8 OF 10)
	5000 - 5050	ANALOG OUTPUT WIRING DIAGRAM (9-10 OF 10)
E. JB LAYOUT AND BILL OF MATERIAL	8000	CONTROL PANEL LAYOUT (1 OF 7)
	8001	CONTROL PANEL BILL OF MATERIAL (2 OF 7)
	8002	CONTACTOR PANEL LAYOUT AND BOM (3 OF 7)
	8003	FUSE PANEL LAYOUT AND BOM (4 OF 7)
	8004	VFD PANEL 1 LAYOUT AND BOM (5 OF 7)
	8005	VFD PANEL 2 LAYOUT AND BOM (6 OF 7)
	8006	VFD PANEL 3 LAYOUT AND BOM (7 OF 7)
F. LAMACOIDS	9000	LAMACOID SCHEDULE (1 OF 1)

NOTES:

PANEL SERIAL NUMBER
TQS-130903-001

REV	DATE	DESCRIPTION	BY
2	06/12/13	REVISED IFC	PZC
1	29/11/13	REVISED IFC	PZC
0	12/11/13	ISSUED FOR CONSTRUCTION	PZC
B	04/10/13	REVISED IFA	PZC
A	03/09/13	ISSUED FOR APPROVAL	PZC

REVISIONS

TRI QUEST SERVICES LTD
ELECTRICAL CONTRACTING - AUTOMATION & CONTROLS

BAY 1, 240040 FRONTIER PLACE ROCKY VIEW, AB T1X 0N2

SCALE	NTS
DESIGNED	PZC
DRAWN	PZC
CHECKED	RH
DATE	SEPTEMBER/2013

PROJECT NAME
ALLIED WATER SECURE ENERGY PWTP

DRAWING TITLE
DRAWING LIST

DRAWING GROUP A
SHEET 1 OF 2
DRAWING NUMBER 5293-ELC-0001
DWG SIZE 11x17
DRAWING REVISION 2

PLOT PLAN & BUILDING LAYOUT SYMBOLS

- P-101 — CONDUIT/CABLE NUMBER
  P-101 (TYP.):
  P-POWER
  C-CONTROL
  F - FIRE DETECTION
  D - DATA
  PC - POWER/CONTROL
  MC - MOTOR CONTROL
  MF - MAIN FEEDER
  LTG - LIGHTING
  TEL - TELEPHONE
- U/G — BELOW GRADE CONDUIT OR CABLE
- ABOVE GRADE CONDUIT OR CABLE
- O/H — OVERHEAD CONDUIT OR CABLE
- CONDUIT DOWN
- CONDUIT UP
- CONDUIT 'T' FITTING
- CONDUIT CAP
- CONDUIT FITTING
- MAIN GROUND WIRE
- GROUNDING JUMPER
- GROUND CONNECTION, COMPRESSION TYPE
- GROUND CONNECTION FOR EQUIPMENT OR BUILDING
- T — THERMOSTAT
- CEILING MOUNTED EXHAUST FAN
- WALL MOUNTED EXHAUST FAN
- CATODYNE HEATER
- BLOWER HEATER
- BASEBOARD HEATER
- SUBMERSIBLE HEATER
- PS — PULL STATION
- B — BUZZER
- X — "F" FOR FIRE ALARM BELL
  "T" FOR TELEPHONE BELL
- X — "F" FOR FIRE ALARM HORN
  "T" FOR TELEPHONE HORN
- FS — FIRE SWITCH
- DISTRIBUTION PANEL
- TRANSFORMER
- TRUCK OUT GND
- $ X — SWITCHES, WHERE x:
  - SINGLE-POLE SWITCH
  2 - DOUBLE-POLE SWITCH
  3 - THREE-WAY SWITCH
  4 - FOUR-WAY SWITCH
  K - KEY-OPERATED SWITCH
- SINGLE RECEPTACLE
- DOUBLE RECEPTACLE
- SPLIT RECEPTACLE
- SPECIAL RECEPTACLE
- TELEPHONE OUTLET
- TELEPHONE JACK
- DATA JACK
- DATA/TELEPHONE JACK
- ESD PUSHBUTTON
- SDP — SMOKE DETECTOR (PHOTOELECTRIC)
- SDI — SMOKE DETECTOR (IONIZATION)
- SDC — SMOKE DETECTOR (COMBINATION)
- UR — ULTRA-VIOLET/INFRARED FLAME DETECTION HEAD
- H — HORN
- M — HORIZONTAL MOTOR
- M — VERTICAL MOTOR
- POWER DISCONNECT
- A — WALL MOUNTED LIGHT FIXTURE TYPE A
- A — PENDANT LIGHT FIXTURE TYPE A
- FLOODLIGHT SHOWING AIMING DIRECTION, TYPE "X" FIRE/GAS ("F"/"G") DETECTOR HEAD
- A — FLUORESCENT LIGHT FIXTURE TYPE A
- EMERGENCY LIGHTING UNIT, DUAL HEAD (NO BATTERY PACK)
- EMERGENCY LIGHTING UNIT, DUAL HEAD (WITH BATTERY PACK AND EXIT SIGN)
- ROTATING BEACON (WALL MOUNT SHOWN) LETTER IN SYMBOL INDICATES COLOUR, IF REQUIRED.
- STROBE BEACON (WALL MOUNT SHOWN) LETTER IN SYMBOL INDICATES COLOUR, IF REQUIRED.
- MOVEMENT ACTIVATED CONTROL C/W SINGLE POLE, SINGLE THROW SWITCH
- PE — PHOTOELECTRIC CELL

TERMINAL BLOCK SYMBOLS

- CONTROL PANEL/JUNCTION BOX-TERMINAL
- PLC/CONTROL-TERMINAL
- CONTROL/POWER DEVICE-TERMINAL

CONTROL & MOTOR SCHEMATIC SYMBOLS

- NORMALLY OPEN (N.O.) PUSHBUTTON
- NORMALLY CLOSED (N.C.) PUSHBUTTON
- ON - OFF SELECTOR SWITHCH
- HAND-OFF-AUTO SELECTOR SWITCH

NORMALLY CLOSED		NORMALLY OPEN
	LEVEL SWITCH	
	PRESSURE SWITCH	
	FLOW SWITCH	
	TEMPERATURE SWITCH	
	LIMIT SWITCH	
	VIBRATION SWITCH	
N.C.T.O.	TIMED CONTACT: TIMES OUT WHEN ENERGIZED	N.O.T.C.
N.C.T.C.	TIMED CONTACT: TIMES OUT WHEN DE-ENERGIZED	N.O.T.O.

- DIFFERENTIAL PRESSURE SWITCH
- MANUAL MOTOR STARTING SWITCH
- SHIELDED 2 CONDUCTOR CABLE WITH GROUND
- FIELD WIRING
- CONTROL PANEL WIRING
- WIRING CONNECTED
- WIRING NOT CONNECTED DEVICE PIN
- RTD — RESISTANCE TEMPERATURE DETECTOR
- FUSE
- CIRCUIT BREAKER
- CONTROL PANEL TERMINAL
- TERMINAL C/W LOCATION NUMBER
- INDICATING/ANNUNCIATOR LIGHT

TDOE	TIME OPEN ON ENERGIZE	USED IN CONJUNCTION WITH COIL
TDODE	TIME DELAY ON DE-ENERGIZE	USED IN CONJUNCTION WITH COIL
T.O.	TIMED TO OPEN	USED IN CONJUNCTION WITH CONTACTS
T.C.	TIMED TO CLOSE	USED IN CONJUNCTION WITH CONTACTS
INST.	INSTANTANEOUS	USED IN CONJUNCTION WITH CONTACTS

- 18 TD 101 14 — RELAY COIL (C/W INPUT PIN No's)
- 10 TD 102 2 — TIME DELAY RELAY COIL (C/W INPUT PIN No's)
- C 103 — CONTACTOR COIL
- ER — ESD RELAY
- CR — CONTROL RELAY
- NORMALLY OPEN CONTACT
- NORMALLY CLOSED CONTACT
- L1 T1 / L2 T2 — CONTACTOR CONTACTS (2 POLE CONTACTOR)
- O/L'S — OVERLOAD CONTACTS
- SOLENOID VALVE
- DIODE

WIRE COLOUR CODE

GROUND/ EARTH - GREEN / BARE WIRE

ANALOG COLOUR CODE

POSITIVE - WHITE SHIELD - BARE

NEGATIVE - BLACK

24VDC COLOUR CODE FOR CONTROL PANEL

24VDC POWER - BROWN (OPTIONAL BLUE)

DC COM - BLUE (USE YELLOW IF POWER COLOUR IS BLUE)

120VAC 1 PHASE COLOUR CODE

L1 - 120VAC POWER - RED L2 - BLACK

NEUTRAL - WHITE

120/208 3 PHASE COLOUR CODE

L1 - RED

L2 - BLACK

L3 - BLUE

NEUTRAL - WHITE

277/480 3 PHASE COLOUR CODE

L1 - RED

L2 - BLACK

L3 - BLUE

NEUTRAL - WHITE

347/600 3 PHASE COLOUR CODE

L1 - RED

L2 - BLACK

L3 - BLUE

NEUTRAL - WHITE

SINGLE LINE SYMBOLS

- AT / AF — CIRCUIT BREAKER
  AT - AMP. TRIP
  AF - AMP. FRAME
- DISCONNECT SWITCH
- FUSIBLE DISCONNECT SWITCH
- CT(3) 1200/5A — CURRENT TRANSFORMER INDICATING 3 COILS & RATIO 1200 TO 5 (240:1)
- FUSE
- CAPACITOR
- CONTACTOR
- MOTOR OVERLOAD PROTECTION
- MALE & FEMALE DISCONNECTING DEVICE
- 3 PHASE GENERATOR
- TRANSFORMER
  - DELTA CONNECTED
  - WYE CONNECTED
  - WYE OR STAR WITH SOLID GROUNDED NEUTRAL
  - WYE OR STAR WITH RESISTANCE GROUNDED NEUTRAL AND MAX. CURRENT INDICATED
- F — EXHAUST FAN
- HP — MOTOR W/ INDICATED HORSEPOWER
- LINE REACTOR
- AUTOMATIC TRANSFER SWITCH
- H KW — HEATER W/ POWER RATING
- UV — UV UNIT
- VFD HP — VARIABLE FREQUENCY DRIVE
- TVSS — TRANSIENT VOLTAGE SURGE SUPPRESSOR
- POWER DISTRIBUTION BLOCK
- SPECIAL OUTLET
- RESISTOR
- BUS BAR WITH CONNECTION
- THERMISTOR

EQUIPMENT ENCLOSURE OUTLINE

- LA — LIGHTNING ARRESTOR
- PT(3) — POTENTIAL TRANSFORMER INDICATING 3 COILS
- X — PILOT LIGHT
  G - GREEN
  R - RED
  A - AMBER
  B - BLUE
  W - WHITE
- A — AMMETER
- V — VOLTMETER
- KWH — KILOWATHOUR METER
- ST — SHUNT TRIP
- GFRM — GROUND FAULT
- PF, KW, KVA — POWER FACTOR METER
- VR — VOLTAGE RELAY
- 50G — GROUND PROTECTIVE RELAY
- WHD — WATT-HOUR DEMAND METER

NOTES:

PANEL SERIAL NUMBER

TQS-130903-001

REV	DATE	DESCRIPTION	BY
2	06/12/13	REVISED IFC	PZC
1	29/11/13	REVISED IFC	PZC
0	12/11/13	ISSUED FOR CONSTRUCTION	PZC
B	04/10/13	REVISED IFA	PZC
A	03/09/13	ISSUED FOR APPROVAL	PZC

REVISIONS

TRI QUEST SERVICES LTD
ELECTRICAL CONTRACTING - AUTOMATION & CONTROLS

BAY 1, 240040 FRONTIER PLACE ROCKY VIEW, AB T1X 0N2

SCALE	NTS
DESIGNED	PZC
DRAWN	PZC
CHECKED	RH
DATE	SEPTEMBER/2013

PROJECT NAME

ALLIED WATER SECURE ENERGY PWTP

DRAWING TITLE

STANDARD ELECTRICAL DETAIL

DRAWING GROUP	A	DRAWING REVISION
SHEET 2 OF 2		2
DRAWING NUMBER 5293-ELC-0002	DWG SIZE 11x17	

Client: Allied Water
Project: Secura Energy PWTP
Project #: 5293

TRIQUEST SERVICES LTD.

Electrical Load List

Voltage 480 VAC

Tag No.	Equipment Description	Skid	Phase	Motor HP	Calc P kW	Power Factor	Calc P KVA	Calc P Kvar	% On	Contin-uous	Inter-mittent	Standby	Continuous			Intermitent			Standby		
													KW	KVA	KVAR	KW	KVA	KVAR	KW	KVA	KVAR
IM-1500	INLINE MIXER - VFD		3	0.50	0.37	0.90	0.41	0.18	100	1	0	0	0.37	0.41	0.18	0.00	0.00	0.00	0.00	0.00	0.00
IM-1700	INLINE MIXER - FUTURE VFD		3	0.50	0.37	0.90	0.41	0.18	100	1	0	0	0.37	0.41	0.18	0.00	0.00	0.00	0.00	0.00	0.00
M-1100	INLINE MIXER FOR TANK TK-1100 (FLOCCULATION TANK) - VFD		3	1.00	0.75	0.90	0.83	0.36	100	1	0	0	0.75	0.83	0.36	0.00	0.00	0.00	0.00	0.00	0.00
P-2200	DAF FEED PUMP		3	7.50	5.60	0.90	6.22	2.71	100	1	0	0	5.60	6.22	2.71	0.00	0.00	0.00	0.00	0.00	0.00
CR-2100	CLARIFIER RAKE		3	0.75	0.56	0.90	0.62	0.27	100	1	0	0	0.56	0.62	0.27	0.00	0.00	0.00	0.00	0.00	0.00
P-2700	SLURRY SEEDING PUMP		3	0.75	0.56	0.90	0.62	0.27	100	1	0	0	0.56	0.62	0.27	0.00	0.00	0.00	0.00	0.00	0.00
P-4200	MULTIMEDIA FILTER FEED PUMP - VFD		3	15.00	11.19	0.90	12.43	5.42	100	1	0	0	11.19	12.43	5.42	0.00	0.00	0.00	0.00	0.00	0.00
P-4300	DAF RECYCLE PUMP		3	10.00	7.46	0.90	8.29	3.61	100	1	0	0	7.46	8.29	3.61	0.00	0.00	0.00	0.00	0.00	0.00
P-4400	DAF SLURRY PUMP		3	1.00	0.75	0.90	0.83	0.36	100	1	0	0	0.75	0.83	0.36	0.00	0.00	0.00	0.00	0.00	0.00
AG-4100	AUGER MOTOR		3	0.33	0.25	0.90	0.27	0.12	100	1	0	0	0.25	0.27	0.12	0.00	0.00	0.00	0.00	0.00	0.00
SK-4100	DRAG SKIMMER - VFD		3	0.33	0.25	0.90	0.27	0.12	100	1	0	0	0.25	0.27	0.12	0.00	0.00	0.00	0.00	0.00	0.00
P-5600	MULTIMEDIA FILTERS BACKWASH PUMP		3	15.00	11.19	0.90	12.43	5.42	100	1	0	0	11.19	12.43	5.42	0.00	0.00	0.00	0.00	0.00	0.00
P-2600	CL SLURRY PUMP		3	5.00	3.73	0.90	4.14	1.81	100	1	0	0	3.73	4.14	1.81	0.00	0.00	0.00	0.00	0.00	0.00
P-8200-1	SLURRY PUMP		3	5.00	3.73	0.90	4.14	1.81	100	1	0	0	3.73	4.14	1.81	0.00	0.00	0.00	0.00	0.00	0.00
P-8200-2	SLURRY PUMP		3	15.00	11.19	0.90	12.43	5.42	100	1	0	0	11.19	12.43	5.42	0.00	0.00	0.00	0.00	0.00	0.00
P-7200	SKIMMINGS PUMP		3	5.00	3.73	0.90	4.14	1.81	100	1	0	0	3.73	4.14	1.81	0.00	0.00	0.00	0.00	0.00	0.00
HTR-1	BUILDING HEATER 1		3		10.00	0.90	11.11	4.84	100	1	0	0	10.00	11.11	4.84	0.00	0.00	0.00	0.00	0.00	0.00
HTR-2	BUILDING HEATER 2		3		10.00	0.90	11.11	4.84	100	1	0	0	10.00	11.11	4.84	0.00	0.00	0.00	0.00	0.00	0.00
HTR-3	BUILDING HEATER 3		3		10.00	0.90	11.11	4.84	100	1	0	0	10.00	11.11	4.84	0.00	0.00	0.00	0.00	0.00	0.00
HTR-4	BUILDING HEATER 4		3		10.00	0.90	11.11	4.84	100	1	0	0	10.00	11.11	4.84	0.00	0.00	0.00	0.00	0.00	0.00
HTR-5	BUILDING HEATER 5		3		10.00	0.90	11.11	4.84	100	1	0	0	10.00	11.11	4.84	0.00	0.00	0.00	0.00	0.00	0.00
XFMR-1	480-120/208VAC TRANSFORMER				40.50	0.90	45.00	19.62	100	1	0	0	40.50	45.00	19.62	0.00	0.00	0.00	0.00	0.00	0.00
					0.00	0.90	0.00	0.00	100	1	0	0	0.00	0.00	0.00	0.00	0.00	0.00	0.00	0.00	0.00
												Total	152.16	169.07	73.70	0.00	0.00	0.00	0.00	0.00	0.00

	Load	Load	Amperage
CONNECTED LOAD	152.16 *kW*	169.07 *kVA*	203.4
Total Estimated Load (C+.5*I)	152.16 *kW*	169.07 *kVA*	203.4

NOTES:

PANEL SERIAL NUMBER
TQS-130903-001

REV	DATE	DESCRIPTION	BY
2	06/12/13	REVISED IFC	PZC
1	29/11/13	REVISED IFC	PZC
0	12/11/13	ISSUED FOR CONSTRUCTION	PZC
B	04/10/13	REVISED IFA	PZC
A	03/09/13	ISSUED FOR APPROVAL	PZC

REVISIONS

TRIQUEST SERVICES LTD.
ELECTRICAL CONTRACTING - AUTOMATION & CONTROLS

BAY 1, 240040 FRONTIER PLACE ROCKY VIEW, AB T1X 0N2

SCALE	NTS
DESIGNED	PZC
DRAWN	PZC
CHECKED	RH
DATE	SEPTEMBER/2013

PROJECT NAME
ALLIED WATER
SECURE ENERGY PWTP

DRAWING TITLE
LOAD LIST

DRAWING GROUP C
SHEET 1 OF 9
DRAWING NUMBER 5293-ELC-0050
DWG SIZE 11x17
DRAWING REVISION 2

Customer: Allied Water
Project Description: Secure Energy PWTP
Project #: 5293

Power Source: Transformer	LP-A	Location: Secure Energy PWTP
Feeder: 3P4W		Voltage: 120/208V 3 Phase
Main Breaker: N/A		Mounting: Wall
Mains: 225A		

DESCRIPTION	kW	BKR	CCT	A	B	C	CCT	BKR	kW	DESCRIPTION
CONTROL PANEL	1.00	20A	1	*			2	15A	0.50	INTERIOR LIGHTING
CONVENIENCE RECEPTACLE	1.00	15A	3		*		4	15A	0.50	EXTERIOR/EMERGENCY LIGHTING
BLOWER	1.20	20A	5			*	6	15A	0.75	F-3800 EXHAUST FAN
P-7600 SUMP PUMP - FUTURE	2.00	15A	7	*			8	15A	0.75	P-9400 SODIUM HYPOCHLORITE PUMP
P-9700-1 SODIUM HYDROXIDE PUMP - FUTURE	0.75	15A	9		*		10	15A	0.75	P-9700-2 SODIUM HYDROXIDE PUMP
P-9500 SODIUM SULPHATE PUMP	0.75	15A	11			*	12	15A	0.75	P-9600-1 SULPHURIC ACID PUMP - FUTURE
P-9600-2 SULPHURIC ACID PUMP	0.75	15A	13	*			14	15A	0.75	P-9200-1 PACI PUMP - FUTURE
P-9200-2 PACI PUMP	0.75	15A	15		*		16	15A	0.75	P-9300-1 POLYMER PUMP - FUTURE
P-9300-2 POLYMER PUMP	0.75	15A	17			*	18	15A	0.75	P-9000 SPARE CHEMICAL PUMP - FUTURE
SPARE		15A	19	*			20	15A		SPARE
SPARE		15A	21		*		22	15A		SPARE
SPARE		15A	23			*	24	15A		SPARE

Phase A Total 5.75 kW
Phase B Total 4.50 kW
Phase C Total 4.95 kW

Panel Total 15.20 kW
Panel Total 42.2 Amps

NOTES:

PANEL SERIAL NUMBER
TQS-130903-001

REV	DATE	DESCRIPTION	BY
2	06/12/13	REVISED IFC	PZC
1	29/11/13	REVISED IFC	PZC
0	12/11/13	ISSUED FOR CONSTRUCTION	PZC
B	04/10/13	REVISED IFA	PZC
A	03/09/13	ISSUED FOR APPROVAL	PZC

REVISIONS

TRIQUEST SERVICES LTD
ELECTRICAL CONTRACTING - AUTOMATION & CONTROLS

BAY 1, 240040 FRONTIER PLACE ROCKY VIEW, AB T1X 0N2

SCALE	NTS
DESIGNED	PZC
DRAWN	PZC
CHECKED	RH
DATE	SEPTEMBER/2013

PROJECT NAME
ALLIED WATER
SECURE ENERGY PWTP

DRAWING TITLE
PANEL SCHEDULE

DRAWING GROUP C
SHEET 2 OF 9
DRAWING NUMBER 5293-ELC-0070
DWG SIZE 11x17
DRAWING REVISION 2

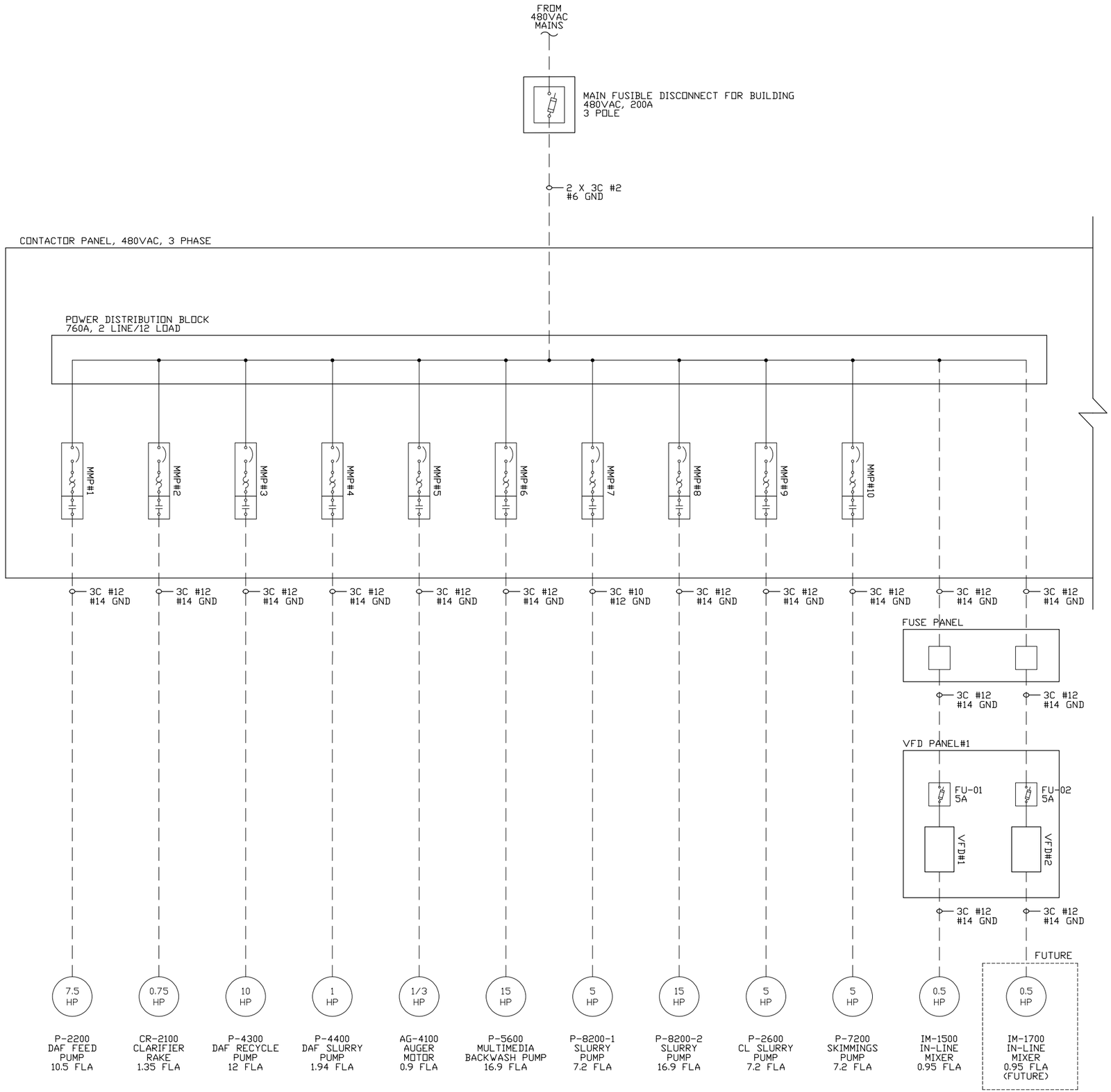

NOTES:

PANEL SERIAL NUMBER

TQS-130903-001

REV	DATE	DESCRIPTION	BY
2	06/12/13	REVISED IFC	PZC
1	29/11/13	REVISED IFC	PZC
0	12/11/13	ISSUED FOR CONSTRUCTION	PZC
B	04/10/13	REVISED IFA	PZC
A	03/09/13	ISSUED FOR APPROVAL	PZC

REVISIONS

TRI QUEST SERVICES LTD

ELECTRICAL CONTRACTING - AUTOMATION & CONTROLS

BAY 1, 240040 FRONTIER PLACE ROCKY VIEW, AB T1X 0N2

SCALE	NTS
DESIGNED	PZC
DRAWN	PZC
CHECKED	RH
DATE	SEPTEMBER/2013

PROJECT NAME

ALLIED WATER SECURE ENERGY PWTP

DRAWING TITLE

SINGLE LINE DIAGRAM

DRAWING GROUP	C		DRAWING REVISION
SHEET 3	OF 9		2
DRAWING NUMBER 5293-ELC-0080		DWG SIZE 11x17	

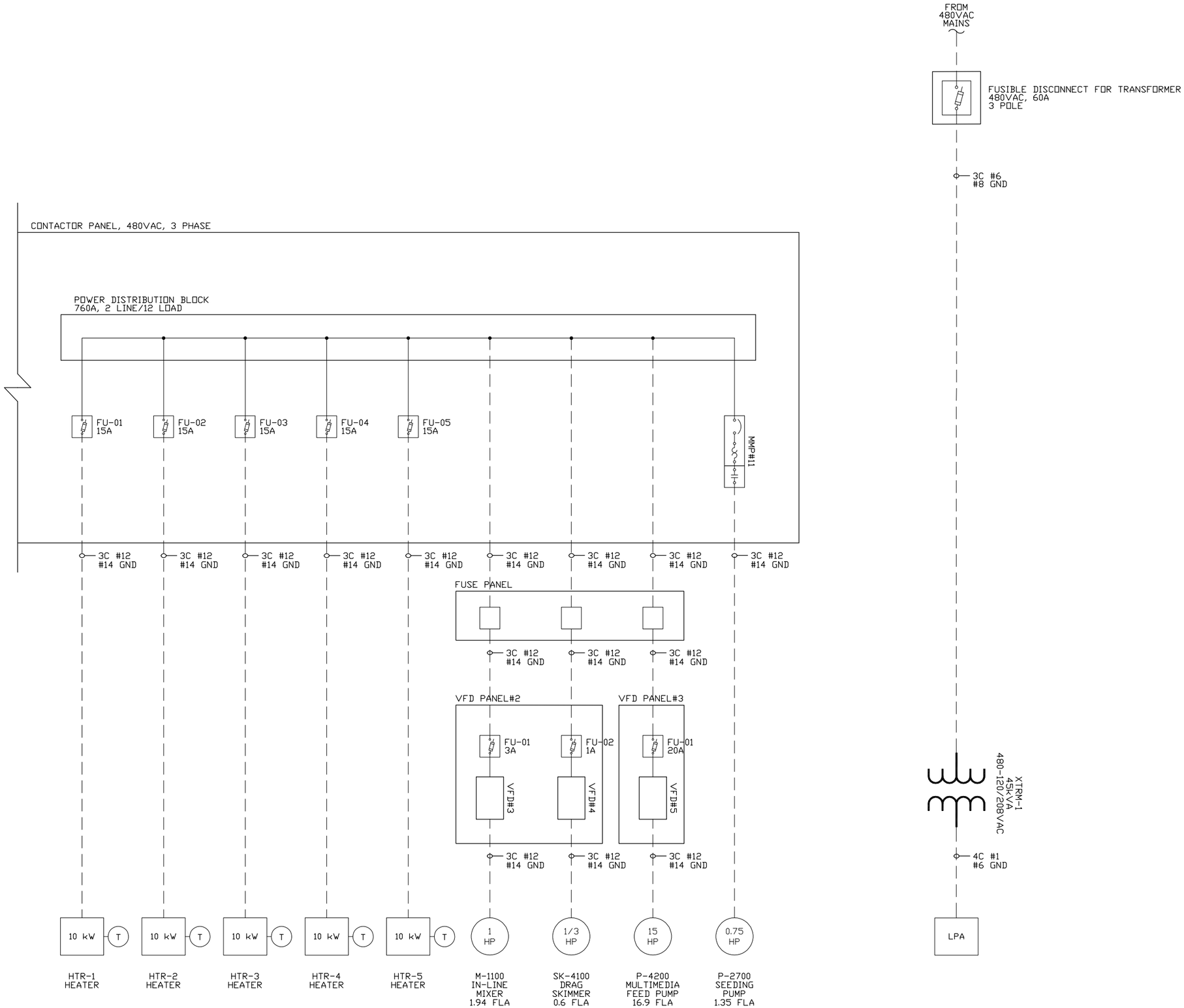

NOTES:

PANEL SERIAL NUMBER

TQS-130903-001

REV	DATE	DESCRIPTION	BY
2	06/12/13	REVISED IFC	PZC
1	29/11/13	REVISED IFC	PZC
0	12/11/13	ISSUED FOR CONSTRUCTION	PZC
B	04/10/13	REVISED IFA	PZC
A	03/09/13	ISSUED FOR APPROVAL	PZC

REVISIONS

TRI QUEST SERVICES LTD

ELECTRICAL CONTRACTING - AUTOMATION & CONTROLS

BAY 1, 240040 FRONTIER PLACE ROCKY VIEW, AB T1X 0N2

SCALE	NTS
DESIGNED	PZC
DRAWN	PZC
CHECKED	RH
DATE	SEPTEMBER/2013

PROJECT NAME

ALLIED WATER SECURE ENERGY PWTP

DRAWING TITLE

SINGLE LINE DIAGRAM

DRAWING GROUP	C	DRAWING REVISION
SHEET 4	OF 9	2
DRAWING NUMBER 5293-ELC-0081	DWG SIZE 11x17	

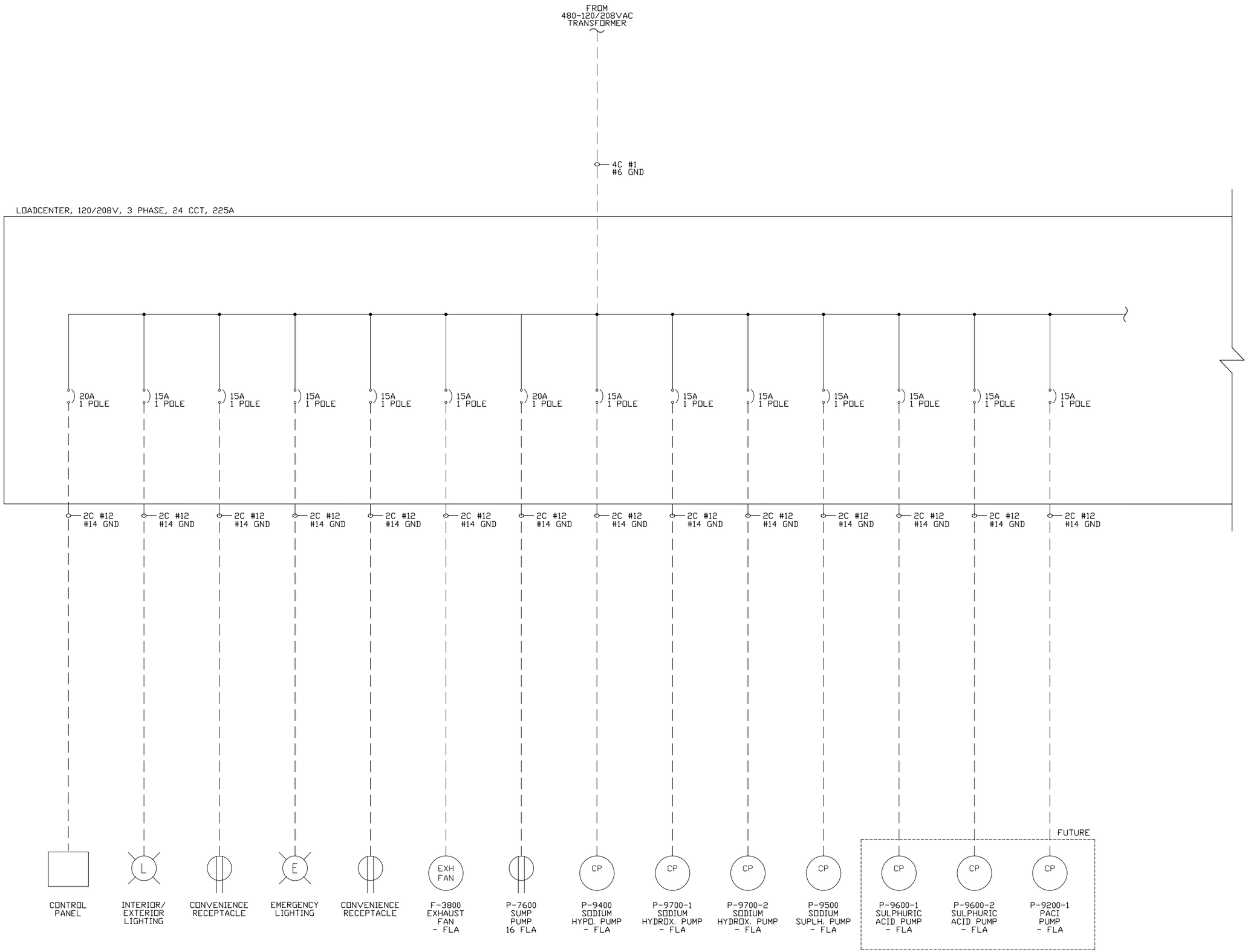

NOTES:

PANEL SERIAL NUMBER

TQS-130903-001

REV	DATE	DESCRIPTION	BY
2	06/12/13	REVISED IFC	PZC
1	29/11/13	REVISED IFC	PZC
0	12/11/13	ISSUED FOR CONSTRUCTION	PZC
B	04/10/13	REVISED IFA	PZC
A	03/09/13	ISSUED FOR APPROVAL	PZC

REVISIONS

TRIQUEST SERVICES LTD
ELECTRICAL CONTRACTING - AUTOMATION & CONTROLS

BAY 1, 240040 FRONTIER PLACE ROCKY VIEW, AB T1X 0N2

SCALE	NTS
DESIGNED	PZC
DRAWN	PZC
CHECKED	RH
DATE	SEPTEMBER/2013

PROJECT NAME

ALLIED WATER SECURE ENERGY PWTP

DRAWING TITLE

SINGLE LINE DIAGRAM

DRAWING GROUP	C	DRAWING REVISION
SHEET 5 OF 9		2
DRAWING NUMBER 5293-ELC-0082	DWG SIZE 11x17	

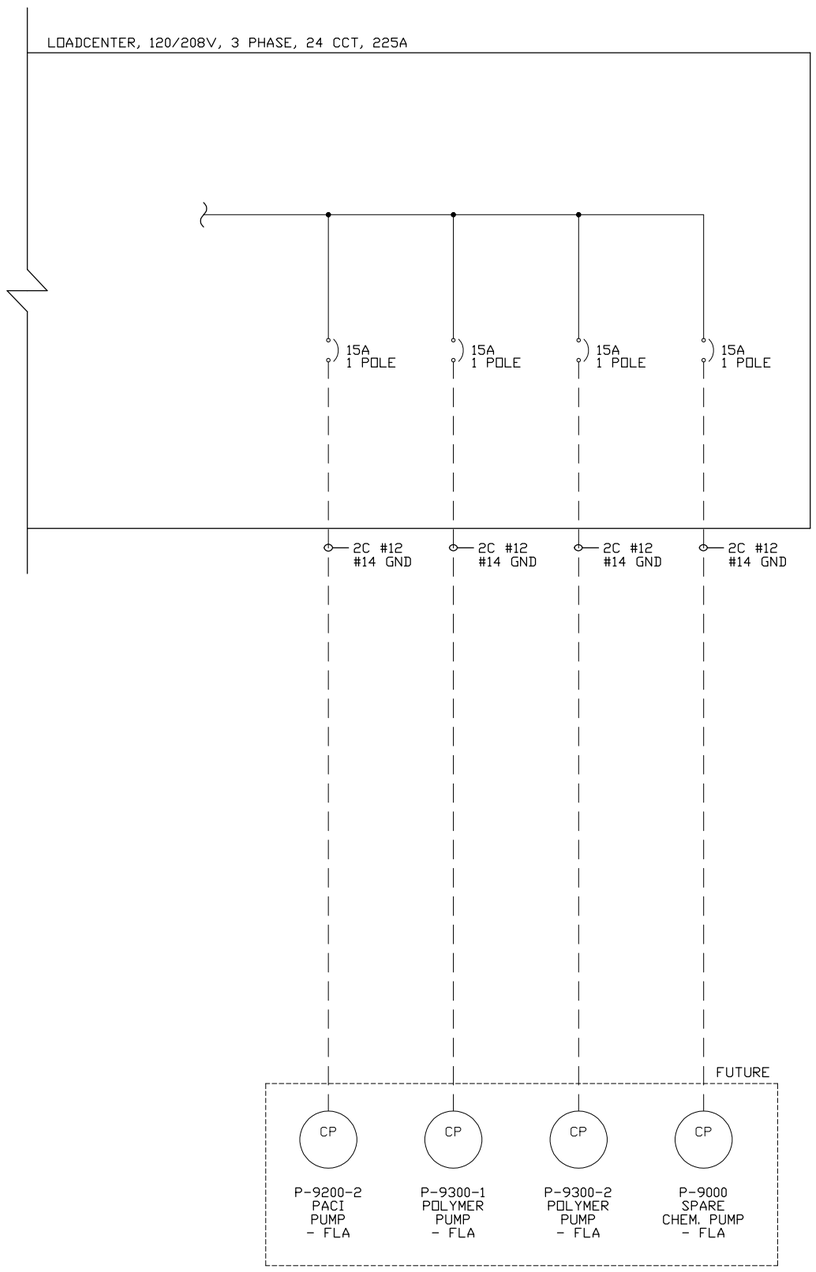

NOTES:

PANEL SERIAL NUMBER

TQS-130903-001

REV	DATE	DESCRIPTION	BY
2	06/12/13	REVISED IFC	PZC
1	29/11/13	REVISED IFC	PZC
0	12/11/13	ISSUED FOR CONSTRUCTION	PZC
B	04/10/13	REVISED IFA	PZC
A	03/09/13	ISSUED FOR APPROVAL	PZC

REVISIONS

TRI QUEST SERVICES LTD

ELECTRICAL CONTRACTING - AUTOMATION & CONTROLS

BAY 1, 240040 FRONTIER PLACE ROCKY VIEW, AB T1X 0N2

SCALE	NTS
DESIGNED	PZC
DRAWN	PZC
CHECKED	RH
DATE	SEPTEMBER/2013

PROJECT NAME

ALLIED WATER SECURE ENERGY PWTP

DRAWING TITLE

SINGLE LINE DIAGRAM

DRAWING GROUP	C	DRAWING REVISION
SHEET 6 OF 9		2
DRAWING NUMBER 5293-ELC-0083	DWG SIZE 11x17	

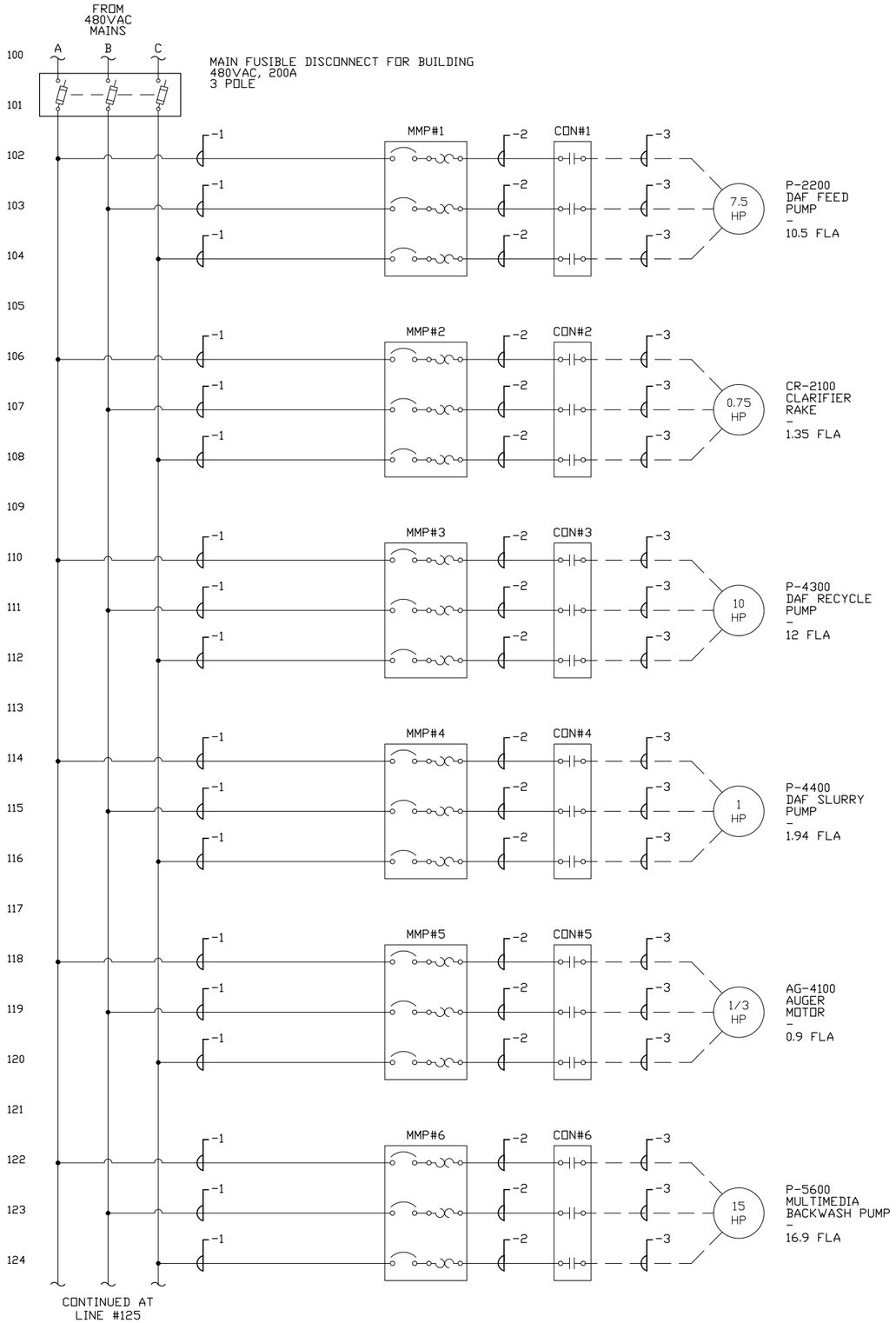

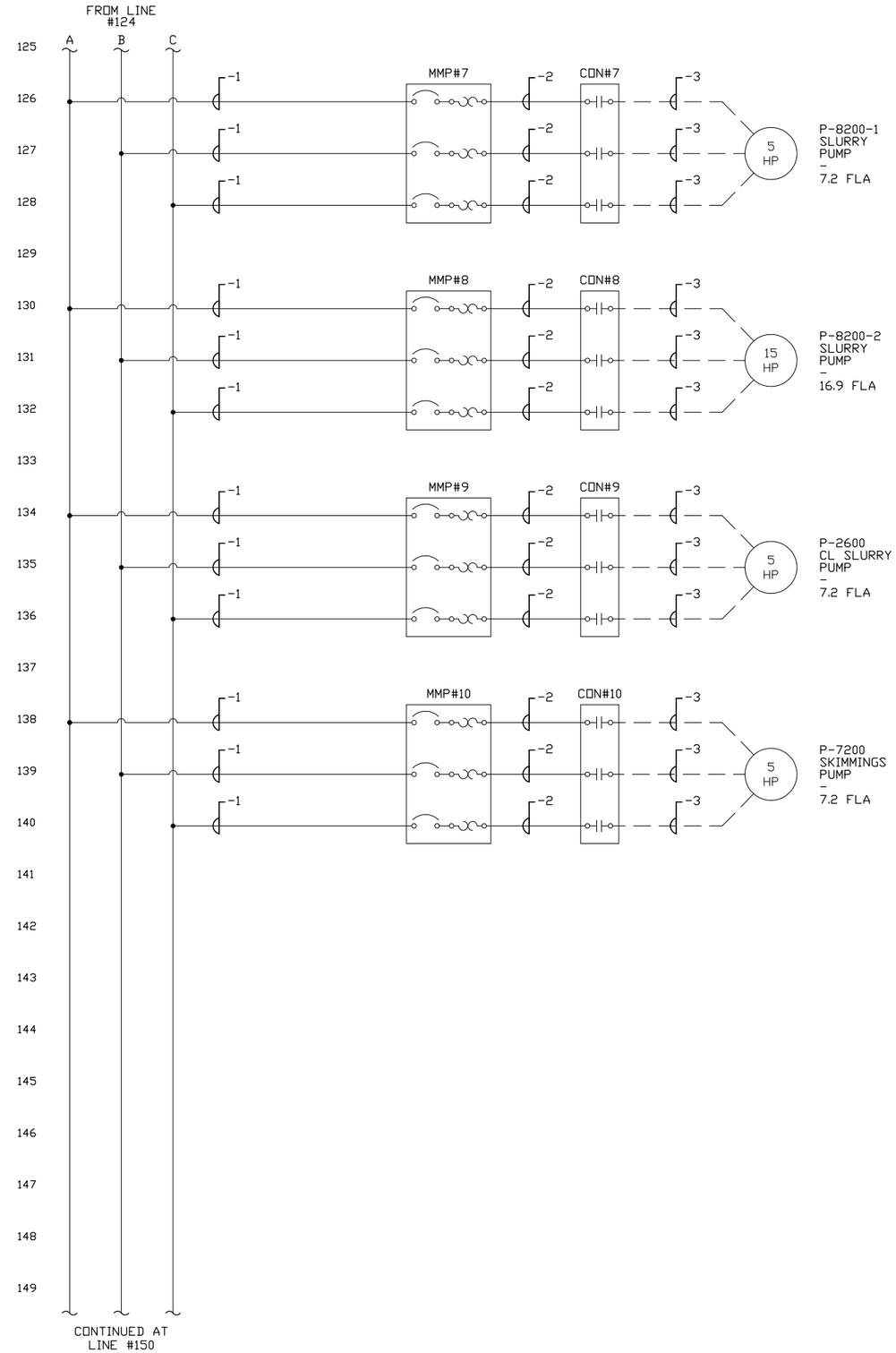

NOTES:

PANEL SERIAL NUMBER

TQS-130903-001

REV	DATE	DESCRIPTION	BY
2	06/12/13	REVISED IFC	PZC
1	29/11/13	REVISED IFC	PZC
0	12/11/13	ISSUED FOR CONSTRUCTION	PZC
B	04/10/13	REVISED IFA	PZC
A	03/09/13	ISSUED FOR APPROVAL	PZC

REVISIONS

TRI QUEST SERVICES LTD

ELECTRICAL CONTRACTING - AUTOMATION & CONTROLS

BAY 1, 240040 FRONTIER
PLACE ROCKY VIEW, AB
T1X 0N2

SCALE	NTS
DESIGNED	PZC
DRAWN	PZC
CHECKED	RH
DATE	SEPTEMBER/2013

PROJECT NAME

ALLIED WATER
SECURE ENERGY PWTP

DRAWING TITLE

THREE
LINE
DIAGRAM

DRAWING GROUP	C	DRAWING REVISION
SHEET 7	OF 9	2
DRAWING NUMBER 5293-ELC-0100	DWG SIZE 11x17	

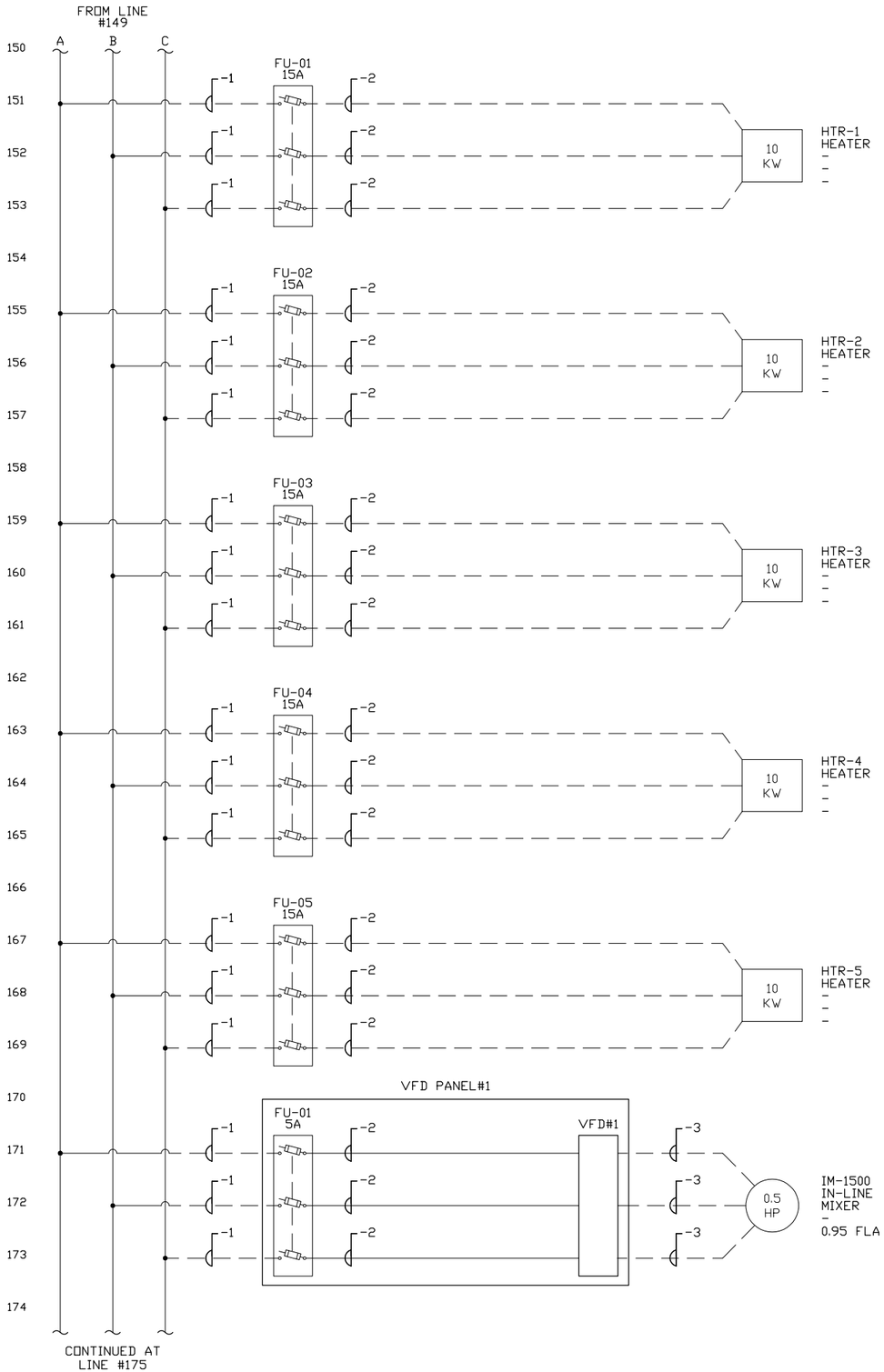

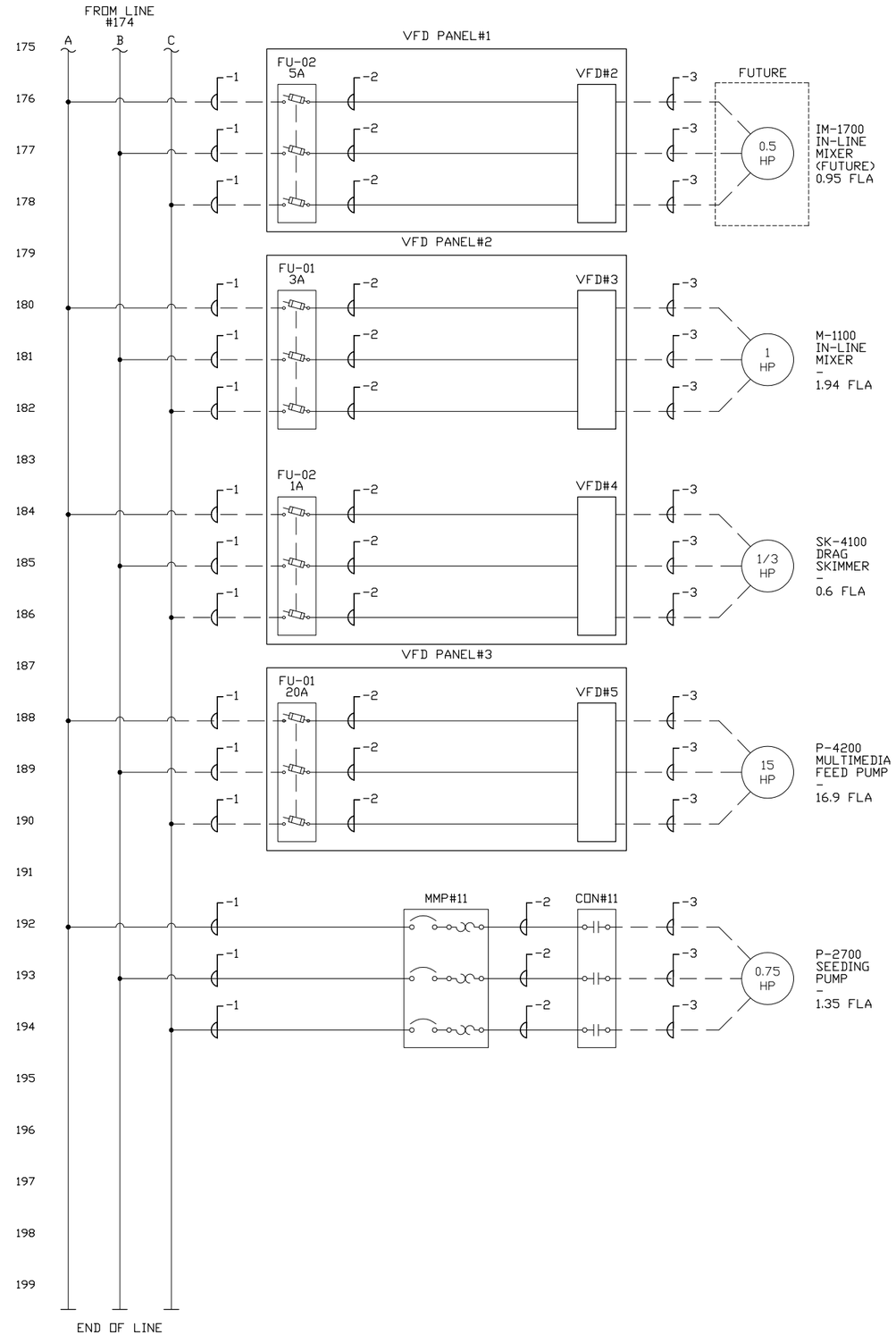

NOTES:

PANEL SERIAL NUMBER

TQS-130903-001

REV	DATE	DESCRIPTION	BY
2	06/12/13	REVISED IFC	PZC
1	29/11/13	REVISED IFC	PZC
0	12/11/13	ISSUED FOR CONSTRUCTION	PZC
B	04/10/13	REVISED IFA	PZC
A	03/09/13	ISSUED FOR APPROVAL	PZC

REVISIONS

TRI QUEST SERVICES LTD
ELECTRICAL CONTRACTING - AUTOMATION & CONTROLS

BAY 1, 240040 FRONTIER PLACE ROCKY VIEW, AB T1X 0N2

SCALE	NTS
DESIGNED	PZC
DRAWN	PZC
CHECKED	RH
DATE	SEPTEMBER/2013

PROJECT NAME

ALLIED WATER SECURE ENERGY PWTP

DRAWING TITLE

THREE LINE DIAGRAM

DRAWING GROUP	C	DRAWING REVISION
SHEET 8 OF 9		2
DRAWING NUMBER 5293-ELC-0150	DWG SIZE 11x17	

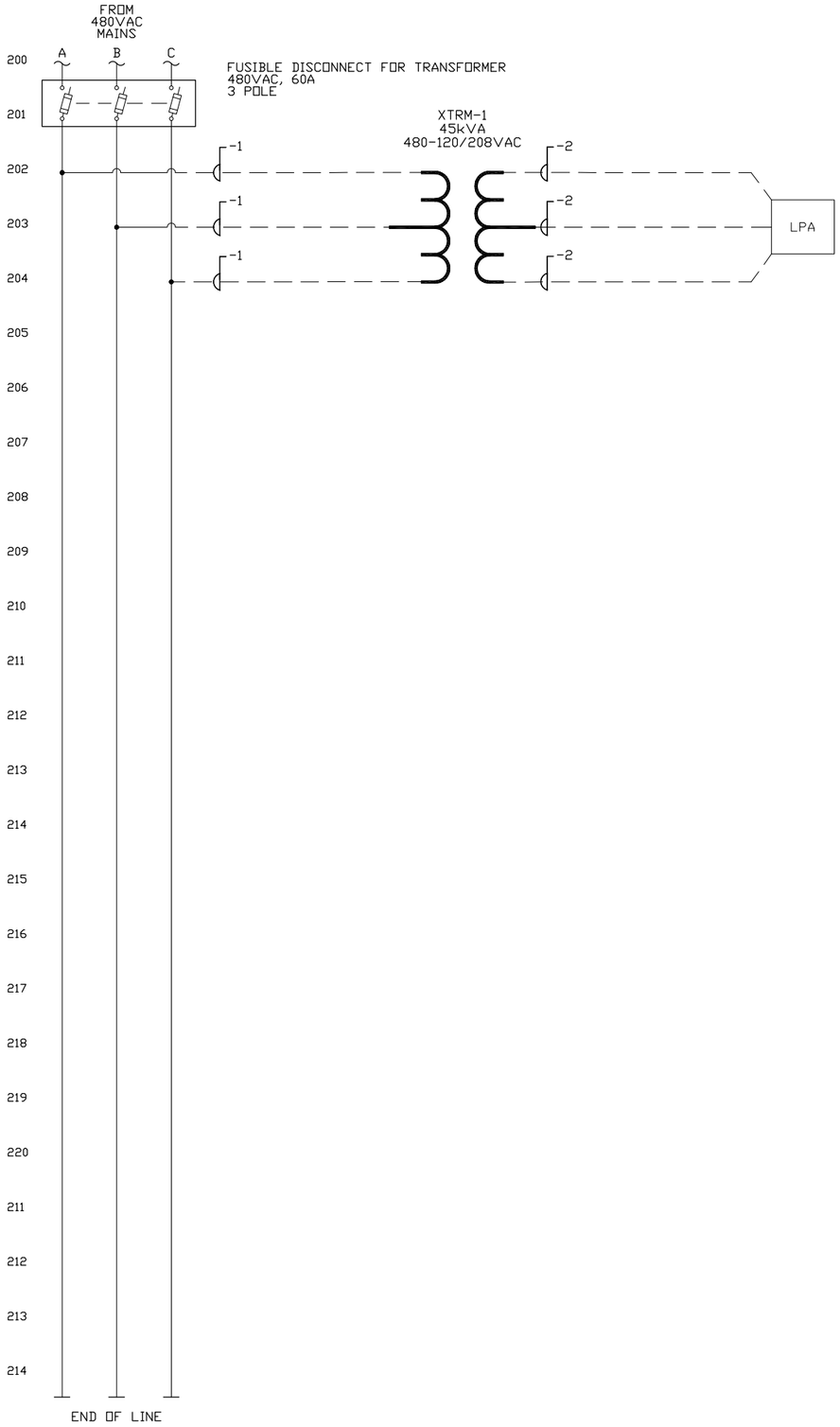

NOTES:

PANEL SERIAL NUMBER

TQS-130903-001

REV	DATE	DESCRIPTION	BY
2	06/12/13	REVISED IFC	PZC
1	29/11/13	REVISED IFC	PZC
0	12/11/13	ISSUED FOR CONSTRUCTION	PZC
B	04/10/13	REVISED IFA	PZC
A	03/09/13	ISSUED FOR APPROVAL	PZC

REVISIONS

TRI QUEST SERVICES LTD

ELECTRICAL CONTRACTING - AUTOMATION & CONTROLS

BAY 1, 240040 FRONTIER PLACE ROCKY VIEW, AB T1X 0N2

SCALE	NTS
DESIGNED	PZC
DRAWN	PZC
CHECKED	RH
DATE	SEPTEMBER/2013

PROJECT NAME

ALLIED WATER SECURE ENERGY PWTP

DRAWING TITLE

THREE LINE DIAGRAM

DRAWING GROUP	C	DRAWING REVISION
SHEET 9 OF 9		2
DRAWING NUMBER 5293-ELC-0200	DWG SIZE 11x17	

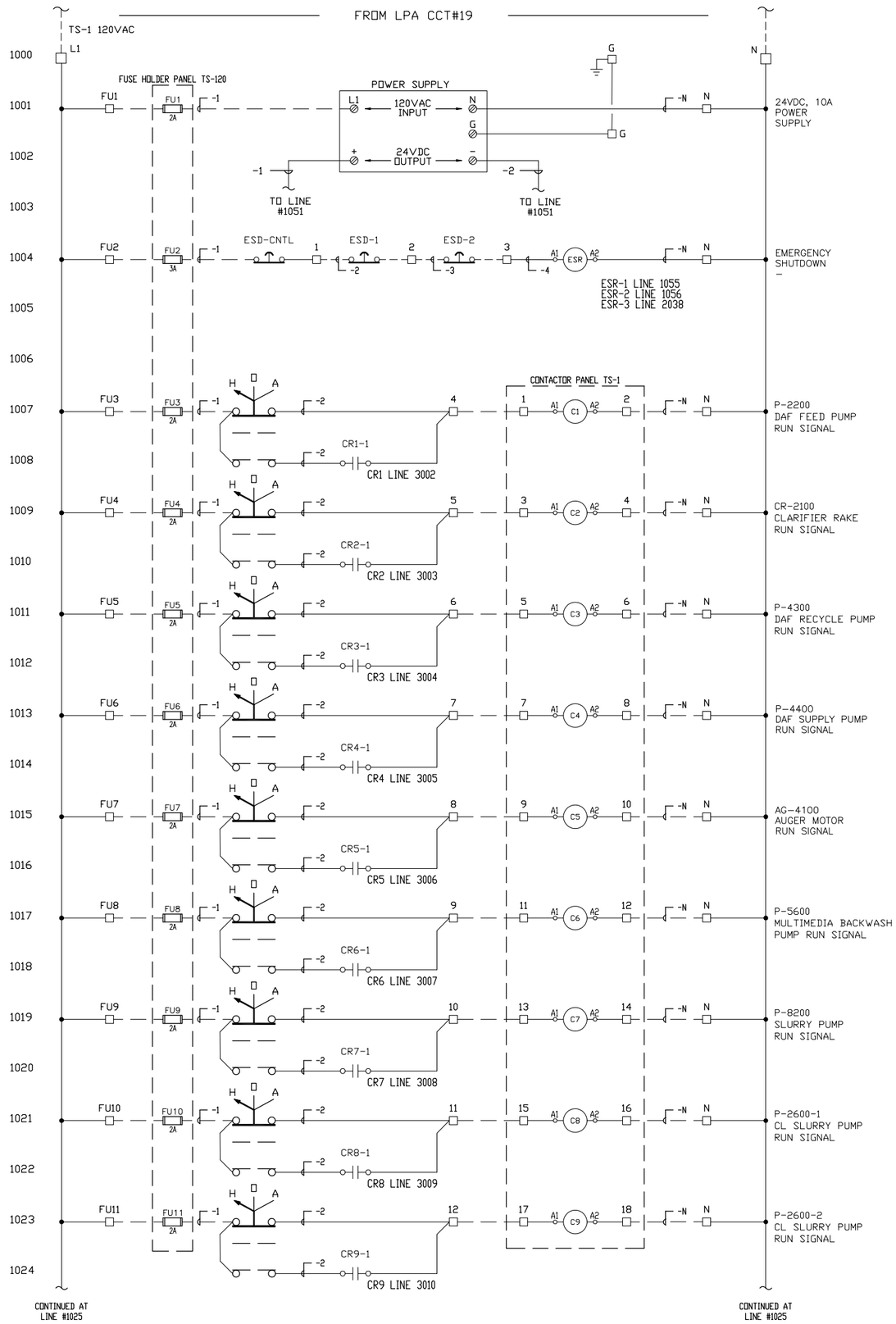

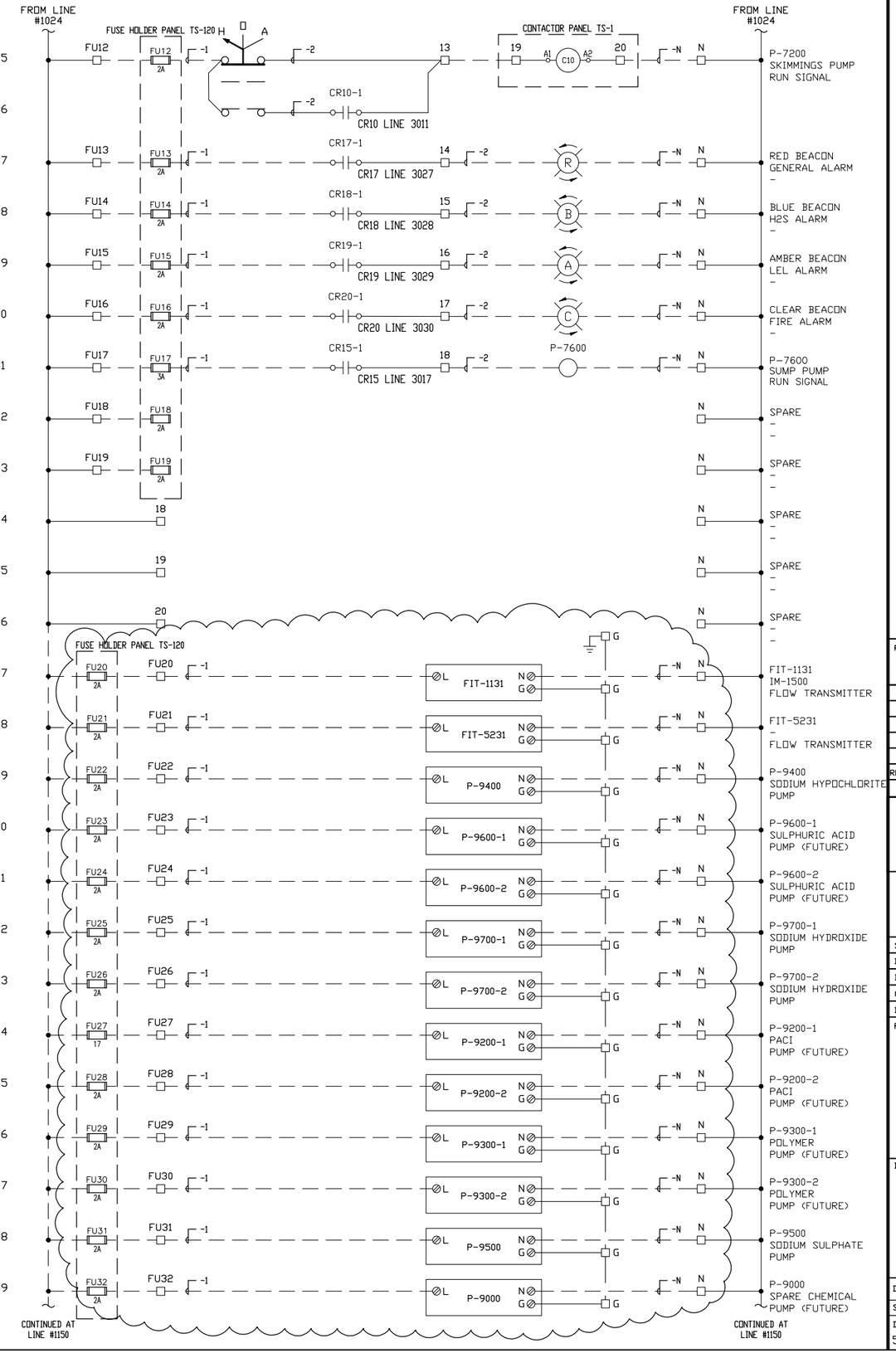

NOTES:

PANEL SERIAL NUMBER

TQS-130903-001

REV.	DATE	DESCRIPTION	BY
2	06/12/13	REVISED IFC	PZC
1	29/11/13	REVISED IFC	PZC
0	12/11/13	ISSUED FOR CONSTRUCTION	PZC
B	04/10/13	REVISED IFA	PZC
A	03/09/13	ISSUED FOR APPROVAL	PZC

REVISIONS

TRIQUEST SERVICES LTD
ELECTRICAL CONTRACTING - AUTOMATION & CONTROLS

BAY 1, 240040 FRONTIER PLACE ROCKY VIEW, AB T1X 0N2

SCALE	NTS
DESIGNED	PZC
DRAWN	PZC
CHECKED	RH
DATE	SEPTEMBER/2013

PROJECT NAME

ALLIED WATER SECURE ENERGY PWTP

DRAWING TITLE

CONTROL WIRING DIAGRAM

DRAWING GROUP	D		DRAWING REVISION
SHEET 1	OF 11		2
DRAWING NUMBER 5293-ELC-1000	DWG SIZE 11x17		

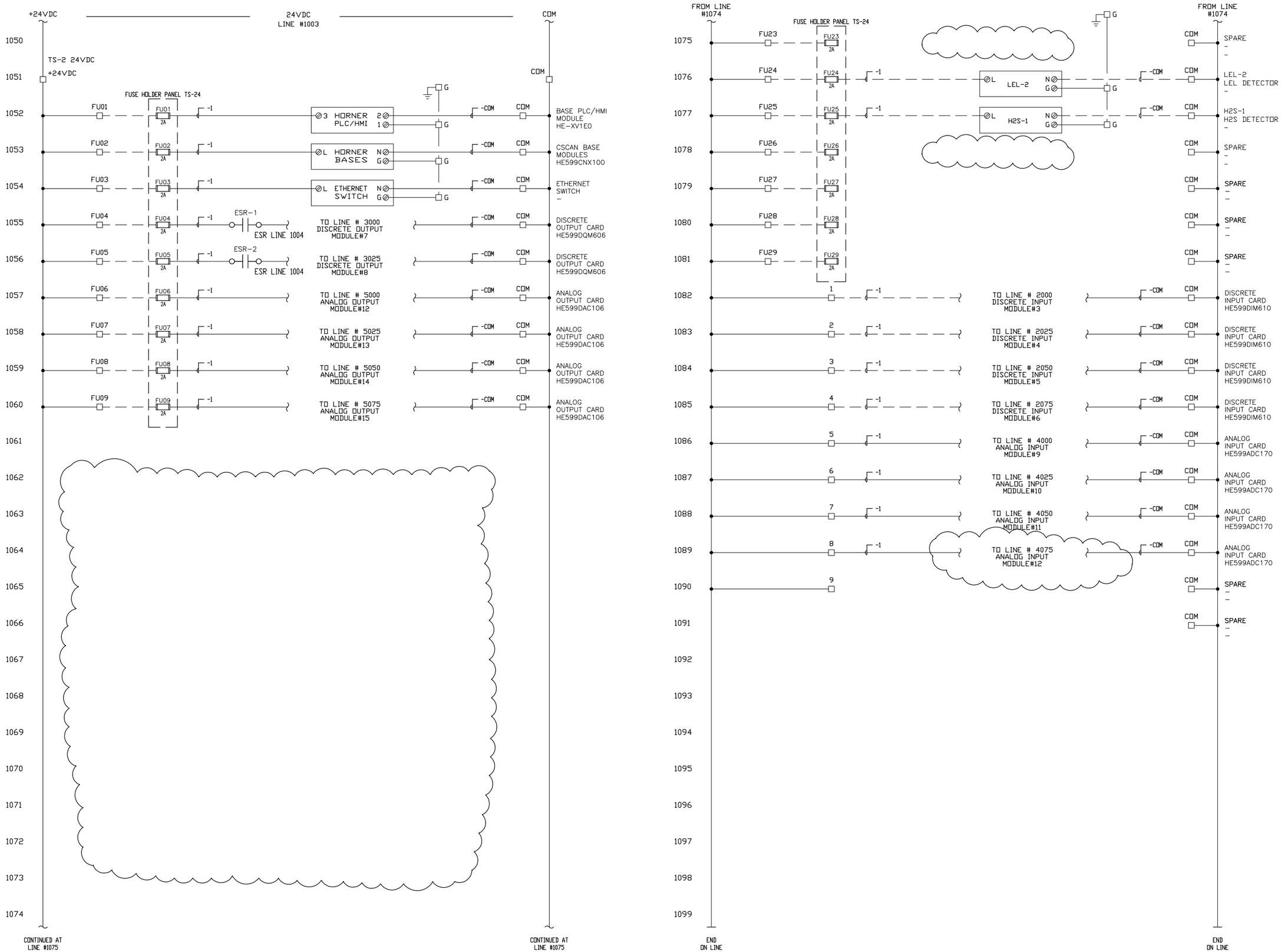

NOTES:

PANEL SERIAL NUMBER

TQS-130903-001

REV	DATE	DESCRIPTION	BY
2	06/12/13	REVISED IFC	PZC
1	29/11/13	REVISED IFC	PZC
0	12/11/13	ISSUED FOR CONSTRUCTION	PZC
B	04/10/13	REVISED IFA	PZC
A	03/09/13	ISSUED FOR APPROVAL	PZC

REVISIONS

TRIQUEST SERVICES LTD

ELECTRICAL CONTRACTING - AUTOMATION & CONTROLS

BAY 1, 240040 FRONTIER PLACE ROCKY VIEW, AB T1X 0N2

SCALE	NTS
DESIGNED	PZC
DRAWN	PZC
CHECKED	RH
DATE	SEPTEMBER/2013

PROJECT NAME

ALLIED WATER SECURE ENERGY PWTP

DRAWING TITLE

CONTROL WIRING DIAGRAM

DRAWING GROUP	D	DRAWING REVISION
SHEET 2 OF 11		2
DRAWING NUMBER 5293-ELC-1050	DWG SIZE 11x17	

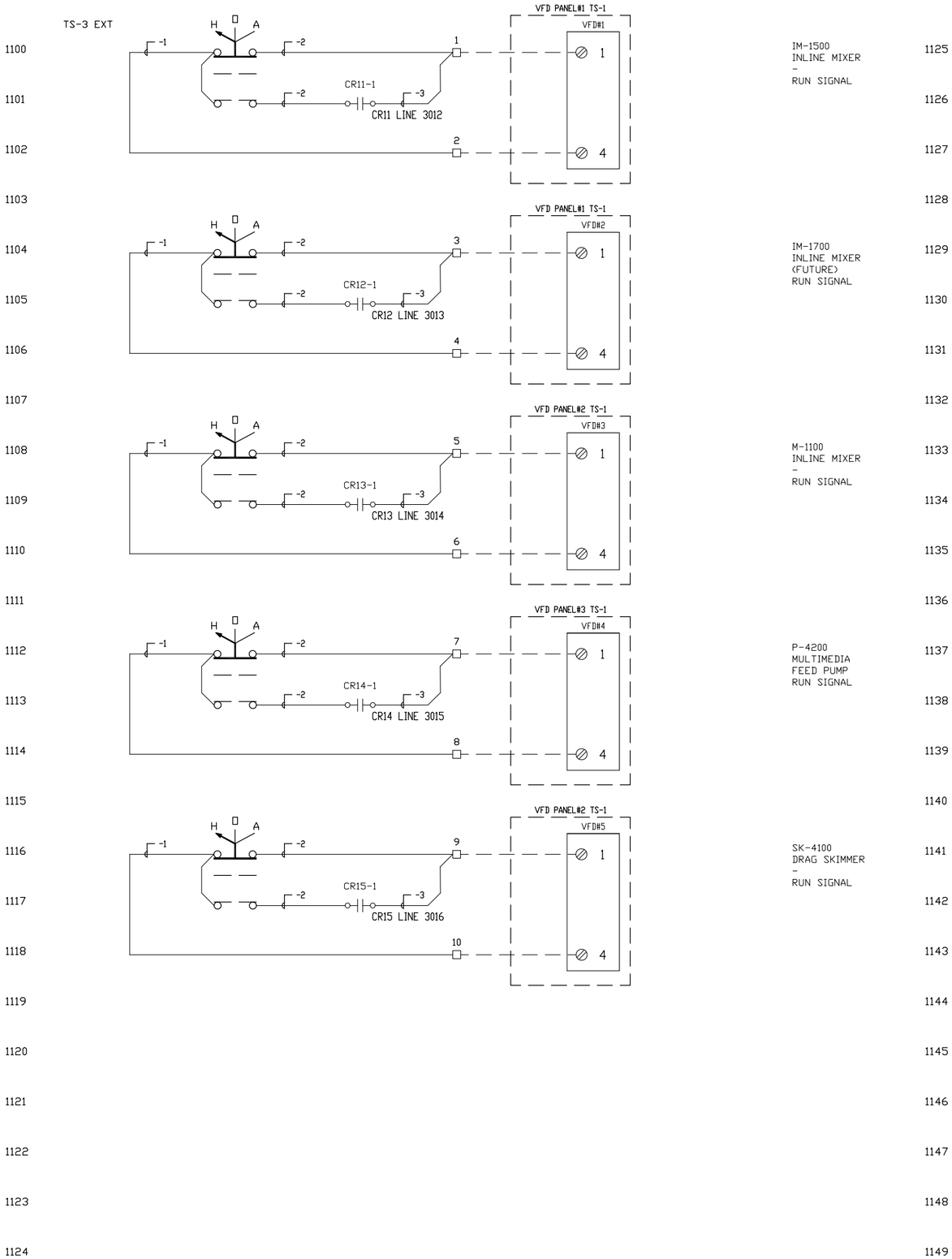

NOTES:

PANEL SERIAL NUMBER

TQS-130903-001

REV	DATE	DESCRIPTION	BY
2	06/12/13	REVISED IFC	PZC
1	29/11/13	REVISED IFC	PZC
0	12/11/13	ISSUED FOR CONSTRUCTION	PZC
B	04/10/13	REVISED IFA	PZC
A	03/09/13	ISSUED FOR APPROVAL	PZC

REVISIONS

TRI QUEST SERVICES LTD

ELECTRICAL CONTRACTING - AUTOMATION & CONTROLS

BAY 1, 240040 FRONTIER PLACE ROCKY VIEW, AB T1X 0N2

SCALE	NTS
DESIGNED	PZC
DRAWN	PZC
CHECKED	RH
DATE	SEPTEMBER/2013

PROJECT NAME

ALLIED WATER SECURE ENERGY PWTP

DRAWING TITLE

CONTROL WIRING DIAGRAM

DRAWING GROUP	D	DRAWING REVISION
SHEET 3 OF 11		2
DRAWING NUMBER 5293-ELC-1100	DWG SIZE 11x17	

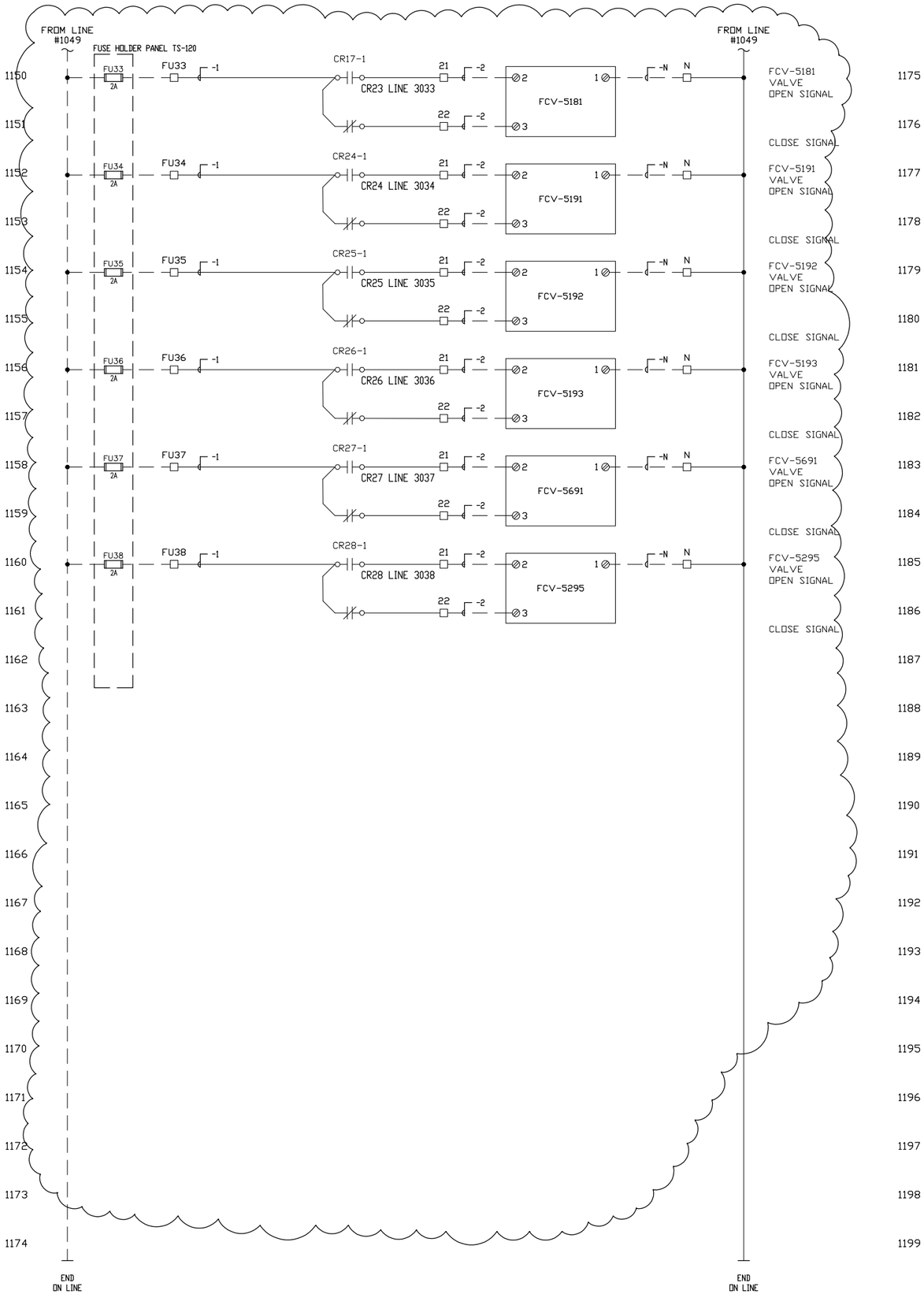

NOTES:

PANEL SERIAL NUMBER

TQS-130903-001

REV	DATE	DESCRIPTION	BY
2	06/12/13	REVISED IFC	PZC
1	29/11/13	REVISED IFC	PZC
0	12/11/13	ISSUED FOR CONSTRUCTION	PZC
B	04/10/13	REVISED IFA	PZC
A	03/09/13	ISSUED FOR APPROVAL	PZC

REVISIONS

TRI QUEST SERVICES LTD

ELECTRICAL CONTRACTING - AUTOMATION & CONTROLS

BAY 1, 240040 FRONTIER PLACE ROCKY VIEW, AB T1X 0N2

SCALE	NTS
DESIGNED	PZC
DRAWN	PZC
CHECKED	RH
DATE	SEPTEMBER/2013

PROJECT NAME

ALLIED WATER SECURE ENERGY PWTP

DRAWING TITLE

CONTROL WIRING DIAGRAM

DRAWING GROUP	D	DRAWING REVISION
SHEET 4 OF 11		2
DRAWING NUMBER 5293-ELC-1000	DWG SIZE 11x17	

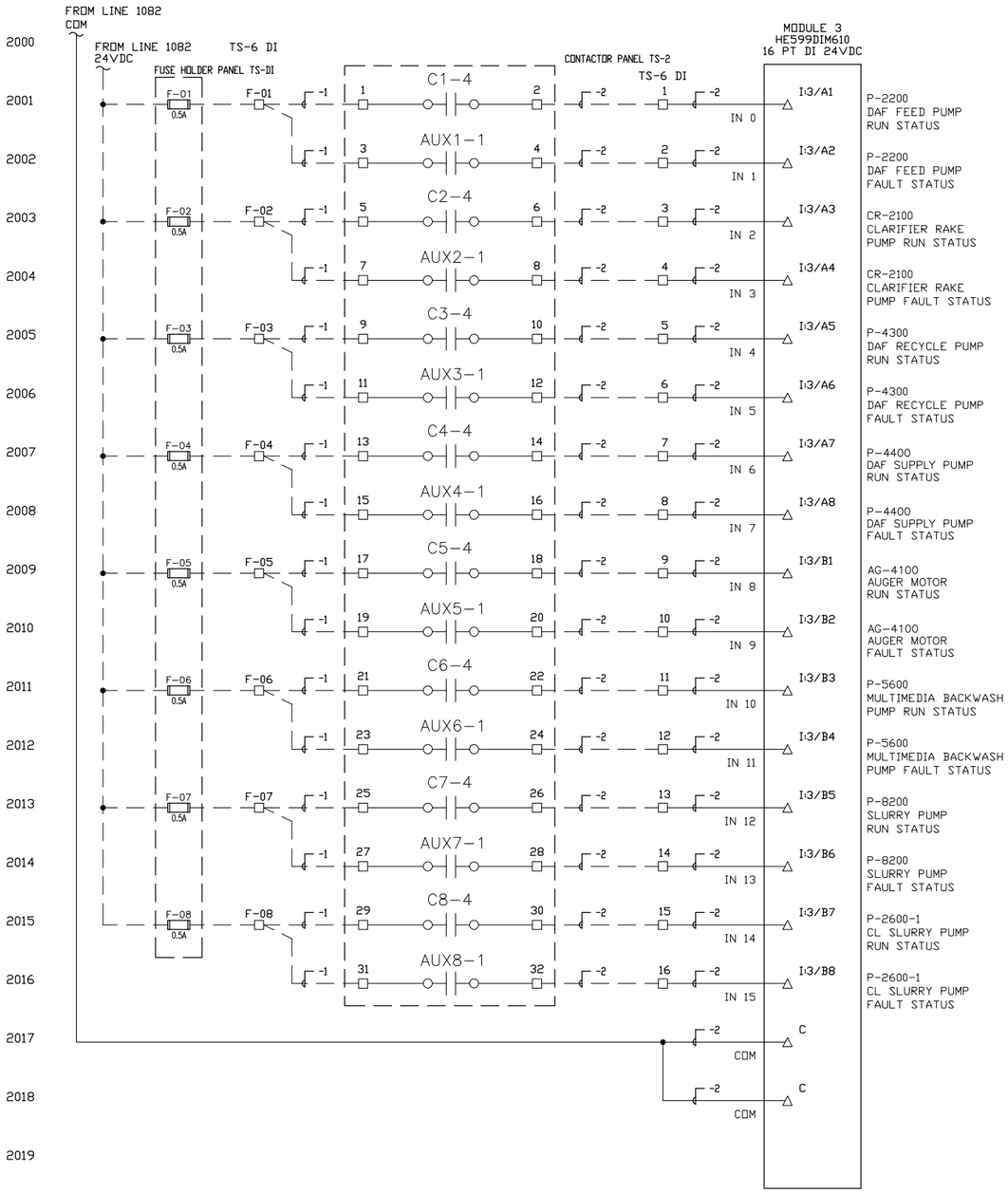

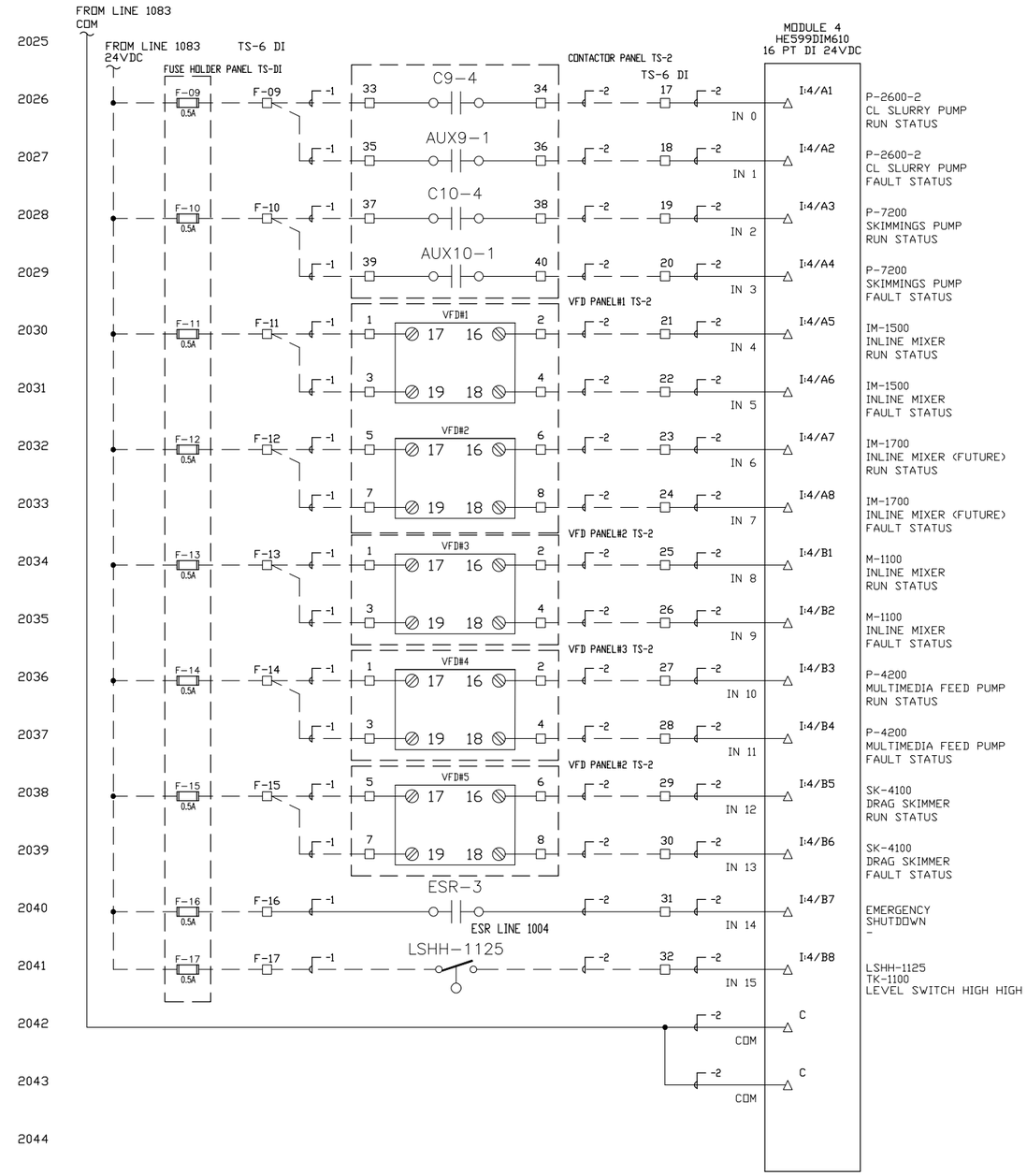

HORNER HE-XV1E0 BASE UNIT	1	2	3	4	5	6	7	8	9	10	11	12	13	14	15	16

HORNER HE-XV1E0 BASE UNIT	1	2	3	4	5	6	7	8	9	10	11	12	13	14	15	16

NOTES:

PANEL SERIAL NUMBER

TQS-130903-001

REV	DATE	DESCRIPTION	BY
2	06/12/13	REVISED IFC	PZC
1	29/11/13	REVISED IFC	PZC
0	12/11/13	ISSUED FOR CONSTRUCTION	PZC
B	04/10/13	REVISED IFA	PZC
A	03/09/13	ISSUED FOR APPROVAL	PZC

REVISIONS

TRIQUEST SERVICES LTD
ELECTRICAL CONTRACTING - AUTOMATION & CONTROLS

BAY 1, 240040 FRONTIER PLACE ROCKY VIEW, AB T1X 0N2

SCALE	NTS
DESIGNED	PZC
DRAWN	PZC
CHECKED	RH
DATE	SEPTEMBER/2013

PROJECT NAME

ALLIED WATER SECURE ENERGY PWTP

DRAWING TITLE

DISCRETE INPUT WIRING DIAGRAM

DRAWING GROUP	D	DRAWING REVISION
SHEET 5 OF 11		2
DRAWING NUMBER 5293-ELC-2000	DWG SIZE 11x17	

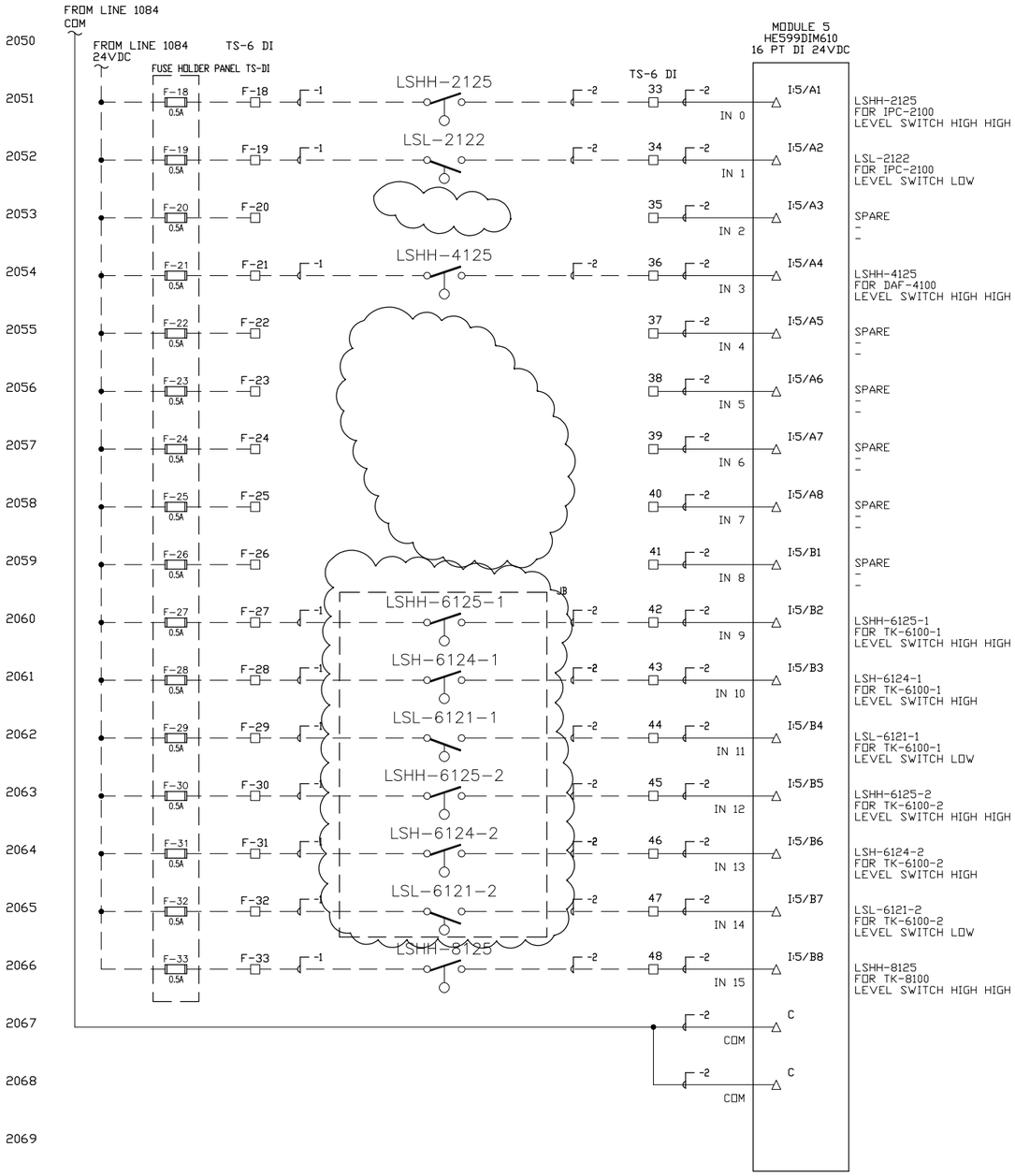

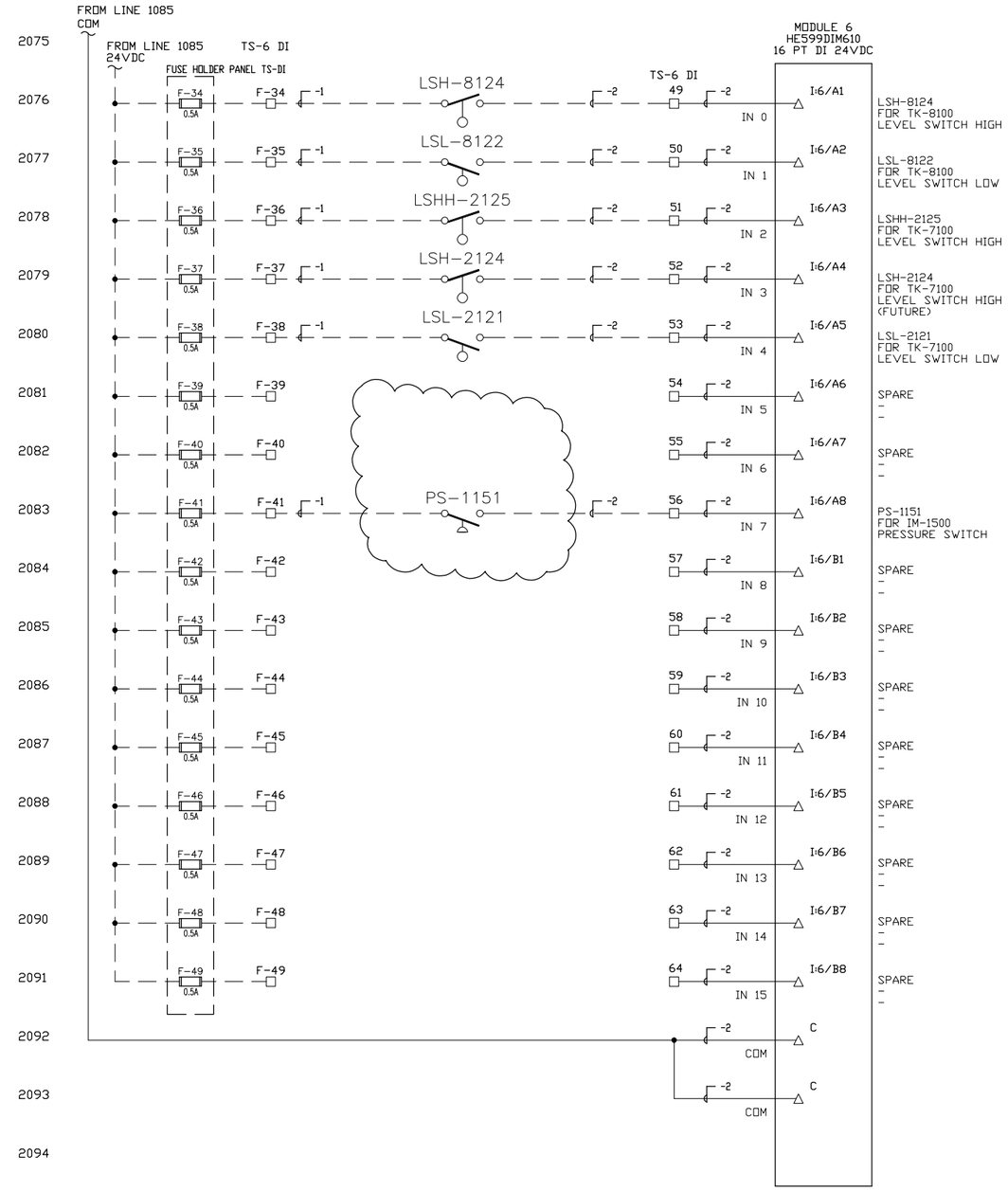

NOTES:

PANEL SERIAL NUMBER

TQS-130903-001

REV	DATE	DESCRIPTION	BY
2	06/12/13	REVISED IFC	PZC
1	29/11/13	REVISED IFC	PZC
0	12/11/13	ISSUED FOR CONSTRUCTION	PZC
B	04/10/13	REVISED IFA	PZC
A	03/09/13	ISSUED FOR APPROVAL	PZC

REVISIONS

TRI QUEST SERVICES LTD
ELECTRICAL CONTRACTING - AUTOMATION & CONTROLS

BAY 1, 240040 FRONTIER
PLACE ROCKY VIEW, AB
T1X 0N2

SCALE	NTS
DESIGNED	PZC
DRAWN	PZC
CHECKED	RH
DATE	SEPTEMBER/2013

PROJECT NAME

ALLIED WATER
SECURE ENERGY PWTP

DRAWING TITLE

DISCRETE INPUT
WIRING
DIAGRAM

DRAWING GROUP	D	DRAWING REVISION
SHEET 6	OF 11	2
DRAWING NUMBER 5293-ELC-2050	DWG SIZE 11x17	

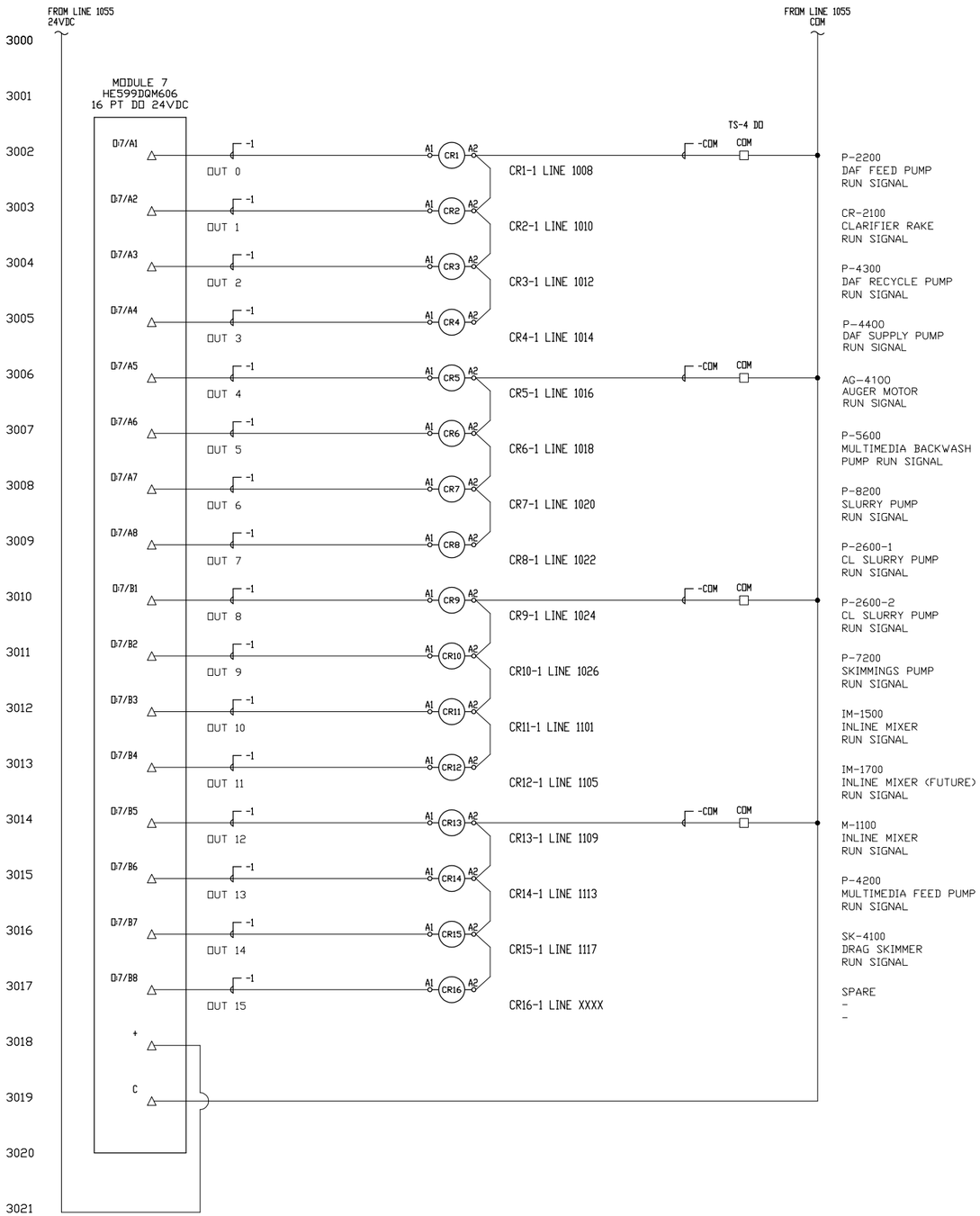

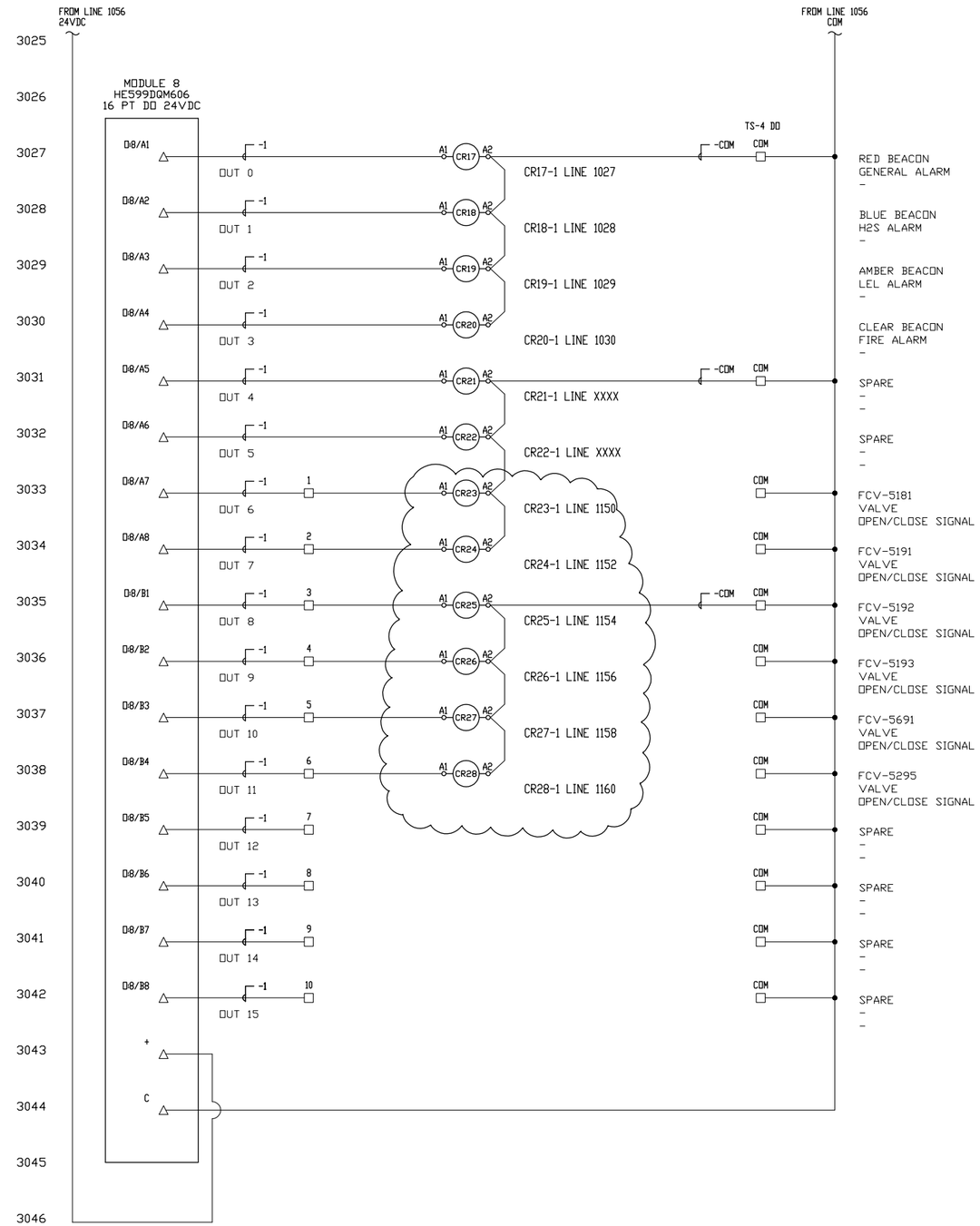

NOTES:

PANEL SERIAL NUMBER

TQS-130903-001

REV	DATE	DESCRIPTION	BY
2	06/12/13	REVISED IFC	PZC
1	29/11/13	REVISED IFC	PZC
0	12/11/13	ISSUED FOR CONSTRUCTION	PZC
B	04/10/13	REVISED IFA	PZC
A	03/09/13	ISSUED FOR APPROVAL	PZC

REVISIONS

TRI QUEST SERVICES LTD

ELECTRICAL CONTRACTING - AUTOMATION & CONTROLS

BAY 1, 240040 FRONTIER PLACE ROCKY VIEW, AB T1X 0N2

SCALE	NTS
DESIGNED	PZC
DRAWN	PZC
CHECKED	RH
DATE	SEPTEMBER/2013

PROJECT NAME

ALLIED WATER SECURE ENERGY PWTP

DRAWING TITLE

DISCRETE OUTPUT WIRING DIAGRAM

DRAWING GROUP	D	DRAWING REVISION
SHEET 7 OF 11		2
DRAWING NUMBER 5293-ELC-3000	DWG SIZE 11x17	

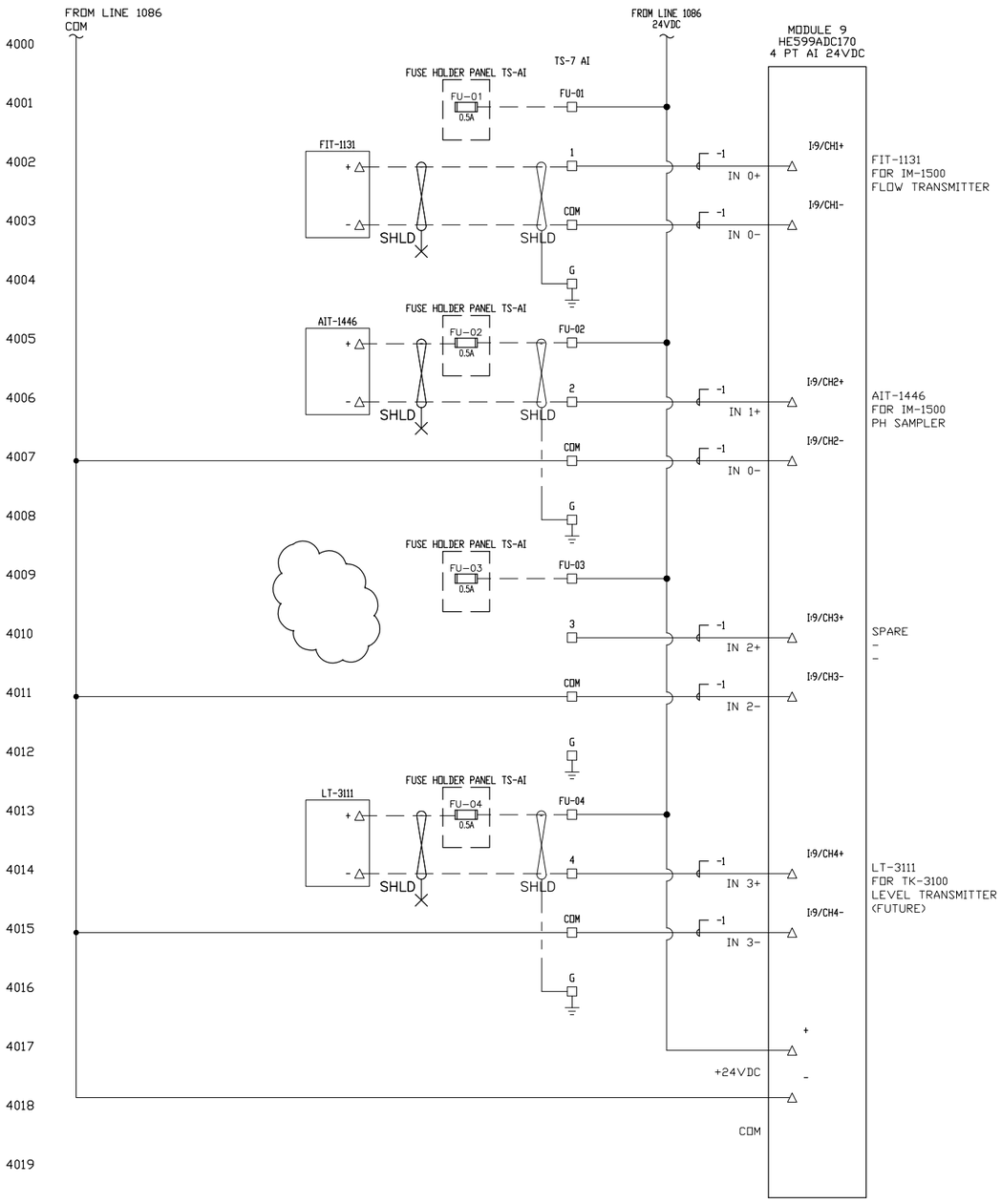

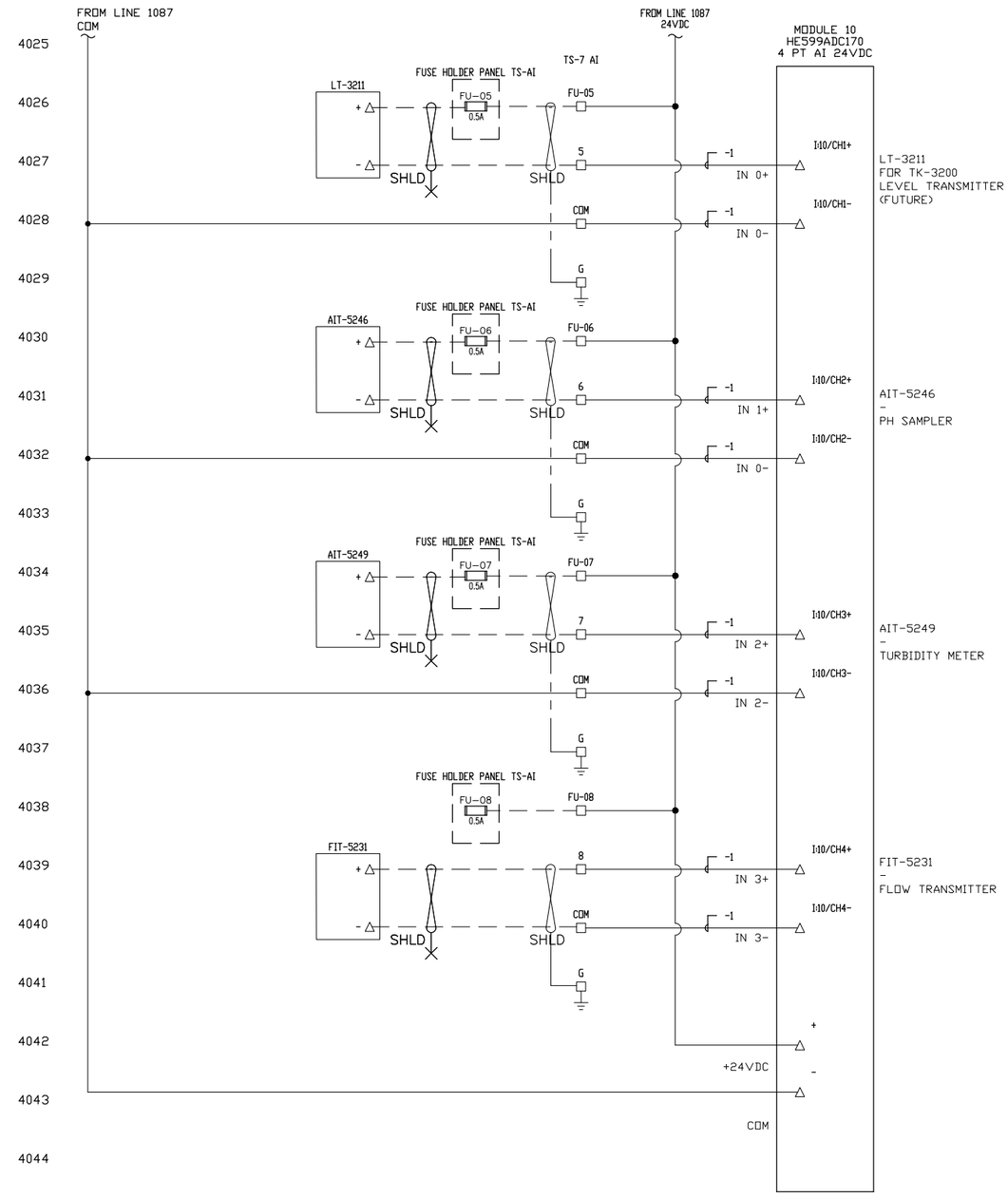

HORNER HE-XV1E0 BASE UNIT	1	2	3	4	5	6	7	8	9	10	11	12	13	14	15	16

HORNER HE-XV1E0 BASE UNIT	1	2	3	4	5	6	7	8	9	10	11	12	13	14	15	16

NOTES:

PANEL SERIAL NUMBER

TQS-130903-001

REV	DATE	DESCRIPTION	BY
2	06/12/13	REVISED IFC	PZC
1	29/11/13	REVISED IFC	PZC
0	12/11/13	ISSUED FOR CONSTRUCTION	PZC
B	04/10/13	REVISED IFA	PZC
A	03/09/13	ISSUED FOR APPROVAL	PZC

REVISIONS

TRI QUEST SERVICES LTD
ELECTRICAL CONTRACTING - AUTOMATION & CONTROLS

BAY 1, 240040 FRONTIER PLACE ROCKY VIEW, AB T1X 0N2

SCALE	NTS
DESIGNED	PZC
DRAWN	PZC
CHECKED	RH
DATE	SEPTEMBER/2013

PROJECT NAME

ALLIED WATER SECURE ENERGY PWTP

DRAWING TITLE

ANALOG INPUT WIRING DIAGRAM

DRAWING GROUP	D	DRAWING REVISION
SHEET 8 OF 11		2
DRAWING NUMBER 5293-ELC-4000	DWG SIZE 11x17	

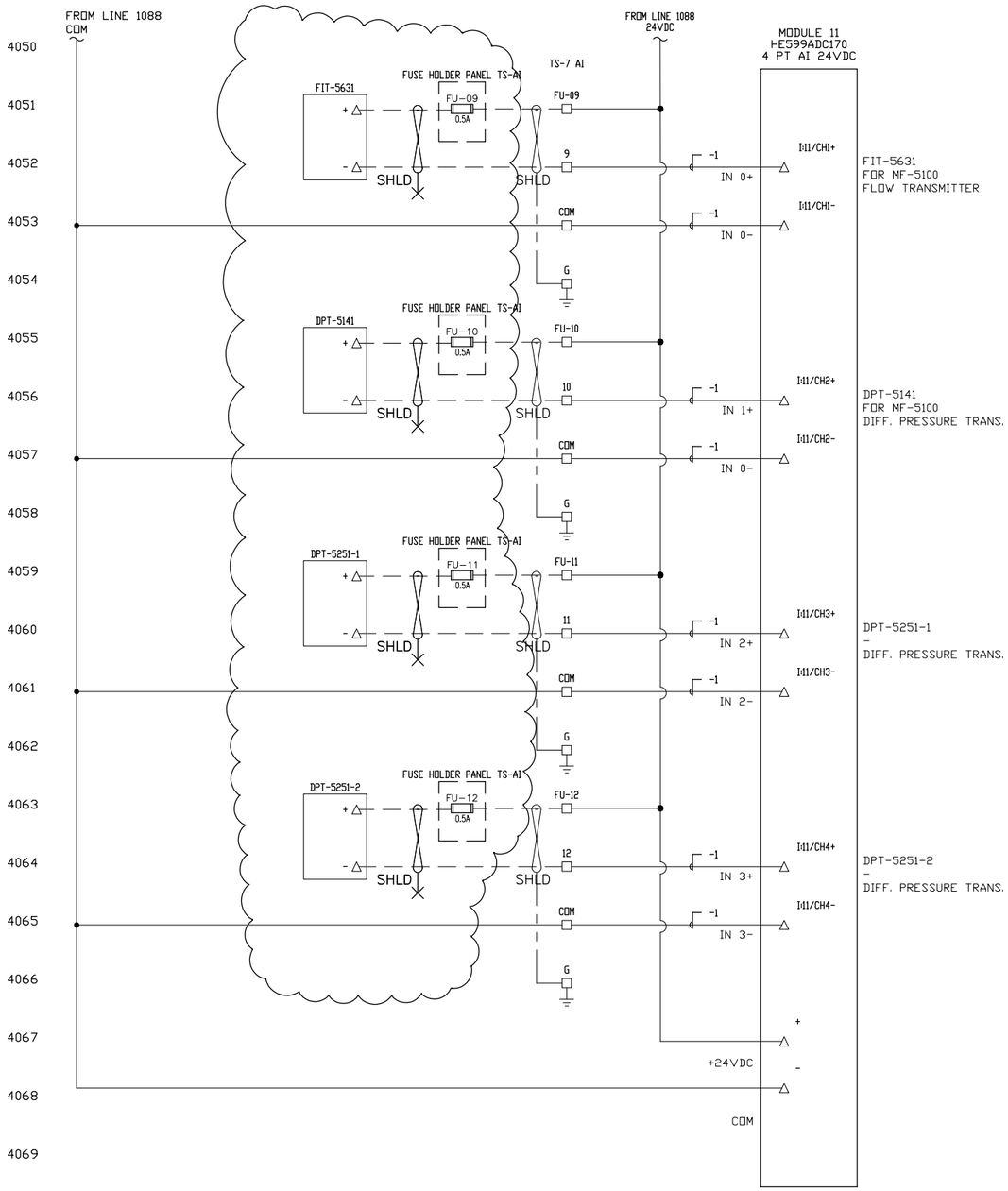

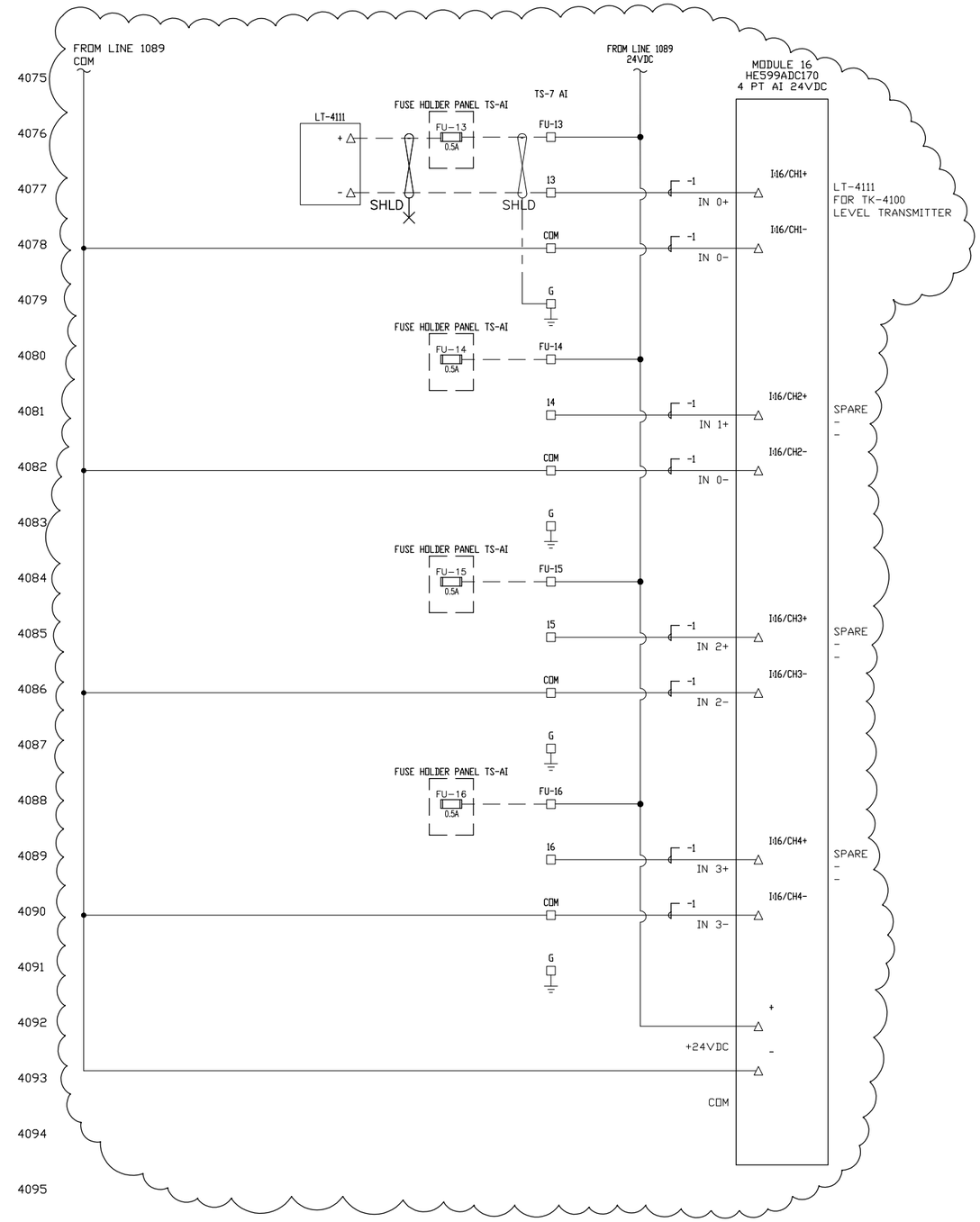

NOTES:

PANEL SERIAL NUMBER

TQS-130903-001

REV	DATE	DESCRIPTION	BY
2	06/12/13	REVISED IFC	PZC
1	29/11/13	REVISED IFC	PZC
0	12/11/13	ISSUED FOR CONSTRUCTION	PZC
B	04/10/13	REVISED IFA	PZC
A	03/09/13	ISSUED FOR APPROVAL	PZC

REVISIONS

TRIQUEST SERVICES LTD
ELECTRICAL CONTRACTING - AUTOMATION & CONTROLS

BAY 1, 240040 FRONTIER PLACE ROCKY VIEW, AB T1X 0N2

SCALE	NTS
DESIGNED	PZC
DRAWN	PZC
CHECKED	RH
DATE	SEPTEMBER/2013

PROJECT NAME

ALLIED WATER SECURE ENERGY PWTP

DRAWING TITLE

ANALOG INPUT WIRING DIAGRAM

DRAWING GROUP	D	DRAWING REVISION
SHEET 9 OF 11		2
DRAWING NUMBER 5293-ELC-4050	DWG SIZE 11x17	

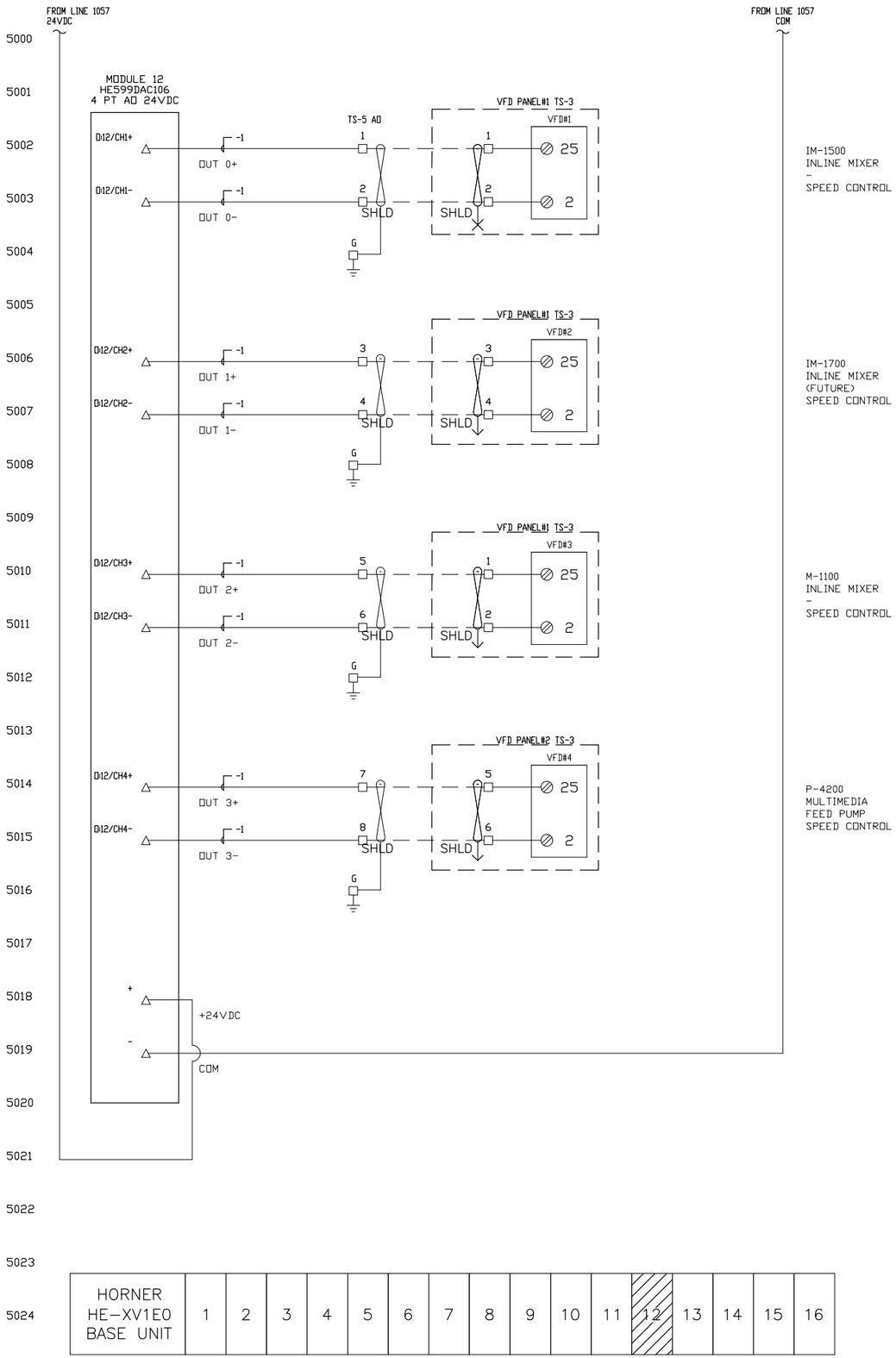

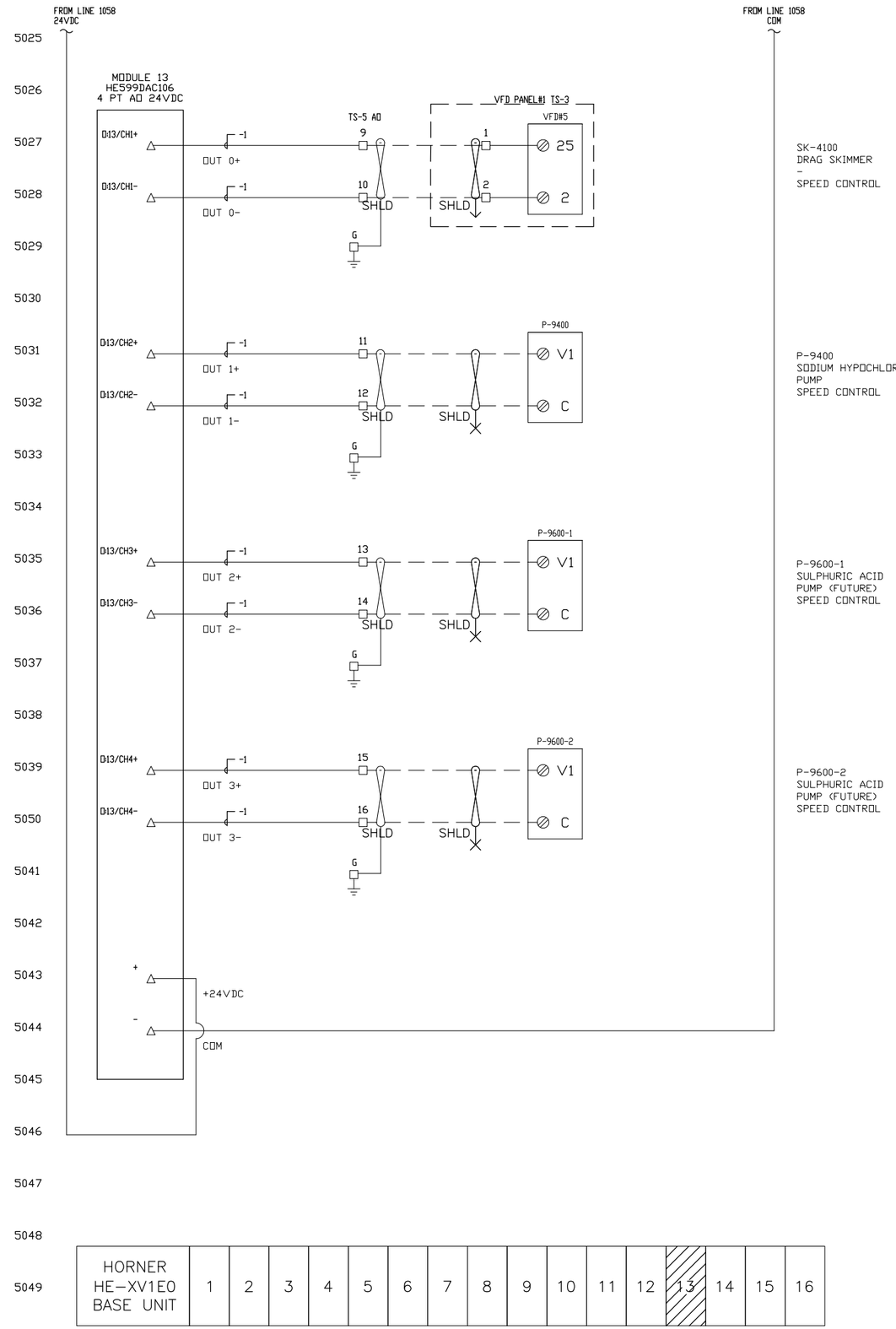

NOTES:

PANEL SERIAL NUMBER

TQS-130903-001

REV	DATE	DESCRIPTION	BY
2	06/12/13	REVISED IFC	PZC
1	29/11/13	REVISED IFC	PZC
0	12/11/13	ISSUED FOR CONSTRUCTION	PZC
B	04/10/13	REVISED IFA	PZC
A	03/09/13	ISSUED FOR APPROVAL	PZC

REVISIONS

TRIQUEST SERVICES LTD
ELECTRICAL CONTRACTING - AUTOMATION & CONTROLS

BAY 1, 240040 FRONTIER
PLACE ROCKY VIEW, AB
T1X 0N2

SCALE	NTS
DESIGNED	PZC
DRAWN	PZC
CHECKED	RH
DATE	SEPTEMBER/2013

PROJECT NAME

ALLIED WATER
SECURE ENERGY PWTP

DRAWING TITLE

ANALOG OUTPUT
WIRING
DIAGRAM

DRAWING GROUP	D	DRAWING REVISION
SHEET 10 OF 11		2
DRAWING NUMBER 5293-ELC-5000	DWG SIZE 11x17	

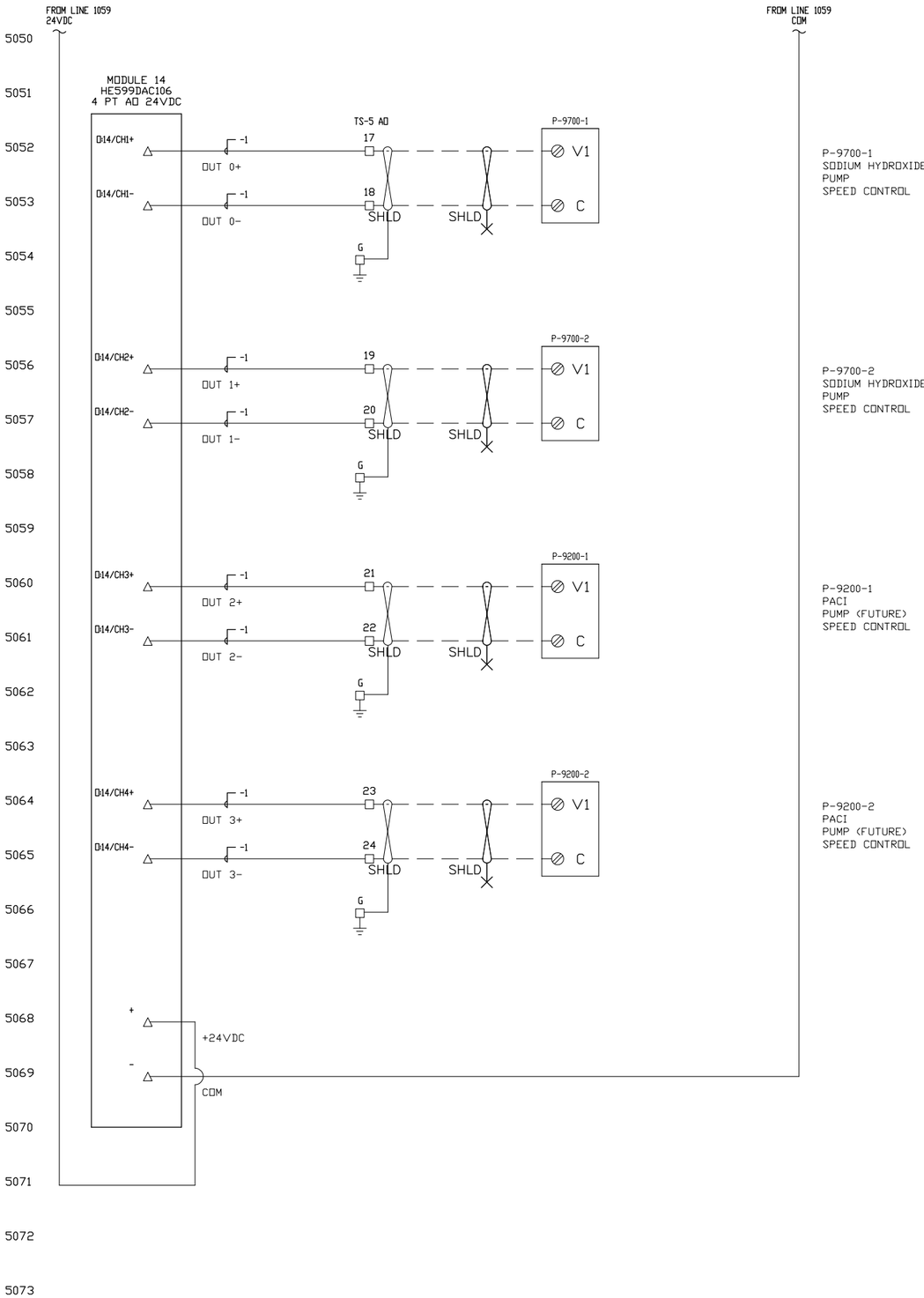

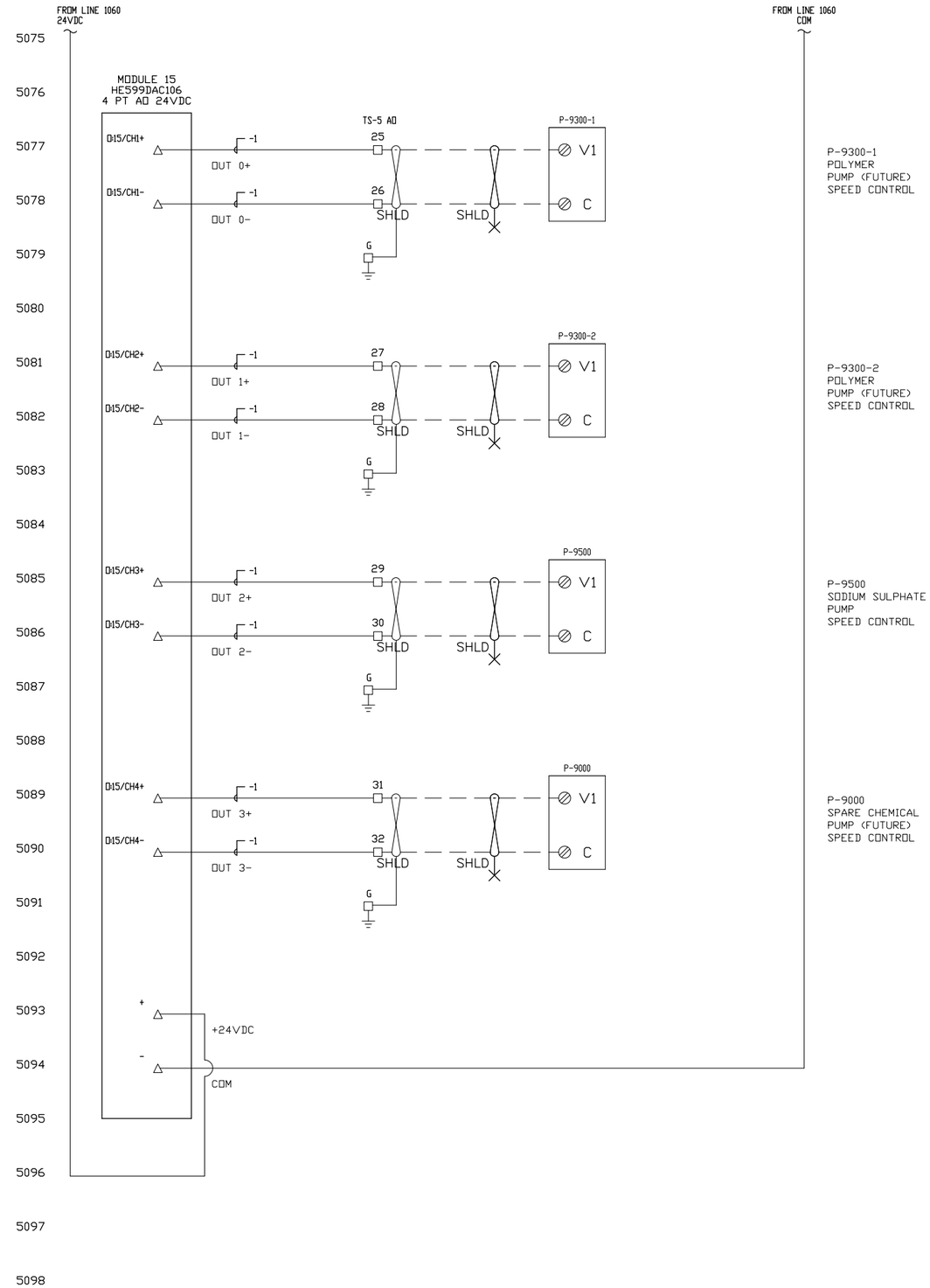

NOTES:

PANEL SERIAL NUMBER

TQS-130903-001

REV	DATE	DESCRIPTION	BY
2	06/12/13	REVISED IFC	PZC
1	29/11/13	REVISED IFC	PZC
0	12/11/13	ISSUED FOR CONSTRUCTION	PZC
B	04/10/13	REVISED IFA	PZC
A	03/09/13	ISSUED FOR APPROVAL	PZC

REVISIONS

TRI QUEST SERVICES LTD
ELECTRICAL CONTRACTING - AUTOMATION & CONTROLS

BAY 1, 240040 FRONTIER PLACE ROCKY VIEW, AB T1X 0N2

SCALE	NTS
DESIGNED	PZC
DRAWN	PZC
CHECKED	RH
DATE	SEPTEMBER/2013

PROJECT NAME

ALLIED WATER SECURE ENERGY PWTP

DRAWING TITLE

ANALOG OUTPUT WIRING DIAGRAM

DRAWING GROUP	D	DRAWING REVISION
SHEET 11 OF 11		2
DRAWING NUMBER 5293-ELC-5050	DWG SIZE 11x17	