FLOWSERVE
Lawrence Pumps
371 Market Street, Lawrence, MA 01843-1595 • Tel: (978) 682-5248 • Fax: (978) 975-4291 • Web Site: www.LawrencePumps.com

TABLE OF CONTENTS

INSTALLATION, OPERATION, AND MAINTENANCE MANUAL

SECTION 1 - PUMP SAFETY GUIDELINES

SECTION 2 - WARRANTY, CUSTOMER SERVICES, AND LONG TERM STORAGE INSTRUCTIONS

SECTION 3 - INSTALLATION, OPERATION AND MAINTENANCE INFORMATION

SECTION 4 - PUMP PERFORMANCE CURVE

SECTION 5 - DIMENSIONAL OUTLINE (G.A.) DRAWING AND LIST OF COMPONENTS

SECTION 6 - CROSS SECTIONAL DRAWING AND PUMP PARTS LIST

SECTION 7 - SEAL

SECTION 8 - COUPLING

SECTION 9 - DRIVER DATA

SECTION 10 - P&ID

SECTION 1:
PUMP SAFETY GUIDELINES

FLOWSERVE
Lawrence Pumps®
371 Market Street, Lawrence, MA 01843-1595 • Tel: (978) 682-5248 • Fax: (978) 975-4291 • Web Site: www.LawrencePumps.com

ISO 9001 REGISTERED FIRM

SAFETY GUIDELINES FOR PUMP USERS

These pumps are inherently safe if used properly. For your further protection, please take note of the following facts:

- The equipment contains rotating parts, and will have at least one protruding shaft and coupling. Always keep clear of such parts. If guards are provided, keep them in place when the pump is running.
- The sound pressure level of the pump and/or driver could exceed **85 DbA**. Please use ear protection.
- The surface temperature of the pump and associated pipework may be high/low enough to cause skin burns. Please use hand protection.
- Do not remove any parts while the pump or associated equipment is under pressure, the pumpage may be violently ejected and could cause injury.
- Precision engineering leads to sharp corners and edges capable of inflicting injury. Please handle with care.
- Observe hazard warnings on electrical equipment. Always completely isolate all electrical equipment before carrying out any work.
- Sling safely for lifting. Use only designated lifting points. Keep clear of raised equipment. Refer to pump outline drawing for appropriate lifting points.
- Use only the correct tools for repair and maintenance. Many fasteners are torque-set and care is needed. Consult maintenance manual(s) before dismantling any part of this equipment.

The above guidelines are based on current state of knowledge and our best assessment, arising from this knowledge, of the potential hazards in the operation of centrifugal pumps.

The equipment supplied does not contain any toxic or dangerous substances.

Any further information necessary may be obtained by telephoning the above listed number.

SECTION 2:
WARRANTY, CUSTOMER SERVICES, AND LONG TERM STORAGE INSTRUCTIONS

FLOWSERVE
Lawrence Pumps®
371 Market Street, Lawrence, MA 01843-1595 • Tel: (978) 682-5248 • Fax: (978) 975-4291 • Web Site: www.LawrencePumps.com

WARRANTY

The warranty obligations are defined in the pump purchase contract. The following warranty is the standard warranty offered by Flowserve.

WARRANTY: Subject to the limitations in Section 17 herein (Limitation of Liability / Exclusion of Consequential Loss), Seller warrants that the Equipment shall be free from defects in material, workmanship, and title. If it appears within twelve (12) months from the initial Equipment startup or until eighteen (18) months after shipment, whichever occurs first, that the Equipment or any part thereof does not conform to this warranty, and Buyer so notifies Seller within a reasonable time after discovery, Seller shall thereupon promptly correct such nonconformity by repair or replacement EXW Seller's factory or service center. Seller's sole obligation and Buyer's sole remedy under this warranty is repair or replacement at Seller's election. Seller's warranty obligation for Services shall be the earlier of either ninety (90) days from the date of initial startup or six (6) months after completion of the Service work. Seller shall not be responsible for any on-site costs, including removal and reinstallation of any warranted Equipment. Buyer agrees to provide Seller reasonable and clear access to its Equipment which may include removal of materials or structures as well as supplying any equipment, materials or structures which are necessary to provide reasonable access to the Equipment being repaired or replaced. All Equipment repaired or replaced will be re-warranted only for the remainder of the original warranty period. THE EXPRESS WARRANTY SET FORTH HEREIN IS THE EXCLUSIVE WARRANTY OF SELLER, AND NO OTHER WARRANTY, EITHER EXPRESSED OR IMPLIED, INCLUDING WARRANTY OF MERCHANTABILITY OR FITNESS FOR PURPOSE, SHALL APPLY. Seller is not responsible for repairs or alterations made by others without mutual written agreement between Seller and Buyer. Seller does not warrant the Equipment or any repair/replacement part against the effects of erosion, corrosion, or normal wear and tear due to operation or the environment. The warranty and remedies set forth herein are conditioned upon proper storage, installation, use and maintenance of the Equipment in all material respects, and in accordance with Seller's written recommendations. Replacement parts or repairs furnished under this warranty shall be subject to the warranty provisions herein for the remaining original warranty period.

FLOWSERVE
Lawrence Pumps
371 Market Street, Lawrence, MA 01843-1595 • Tel: (978) 682-5248 • Fax: (978) 975-4291 • Web Site: www.LawrencePumps.com

CUSTOMER SERVICES

I. TECHNICAL ASSISTANCE

A. START-UP SERVICES

1. Custom-made installation, Operation and Maintenance Manuals are prepared for every pump and included with shipment.

2. On-site assistance is offered upon customer request. This can cover all or part of the following: verification of proper installation, review of start-up and operating procedures,start-up and run-in period.

B. MAINTENANCE

1. Telephone inquiries are always welcomed. Call (978) 682-5248 and ask for Customer Service.

2. On-site assistance is offered upon customer request. This includes technical assistance in equipment removal and disassembly, maintenance and overhaul, classroom training and reassembly and installation, as desired by the customer.

C. TROUBLESHOOTING

1. Telephone inquiries are always welcomed. Call (978) 682-5248 and ask for Customer Service.

2. More complex issues can be handled on-site with the assistance of our Service and Design Engineers.

D. DESIGN MODIFICATIONS

1. As operating conditions change, or system requirements change, Flowserve Lawrence Pumps engineers are available to consult on feasibility, design modification, cost estimates and make arrangements to have work performed to modify the pump to suit your new requirements. All materials and labor provided by Flowserve Lawrence Pumps is fully warranted.

II. SPARE PARTS

A. CUSTOMER NEEDS

1. Flowserve Lawrence Pumps maintains a large inventory of many different spare parts. All parts are to OEM specifications and tolerances, and carry the full FLP Warranty. All parts have been quality checked.

2. Our inventory of parts is fully computerized. Price and availability quotes can be obtained quickly by calling (978) 682-5248 and asking for Spare Parts.

FLOWSERVE
Lawrence Pumps
371 Market Street, Lawrence, MA 01843-1595 • Tel: (978) 682-5248 • Fax: (978) 975-4291 • Web Site: www.LawrencePumps.com

CUSTOMER SERVICES

B. SPECIAL SITUATIONS

1. Many of our customers use pumps manufactured in special metallurgies, many of which are not stocked on a regular basis. Other customers use our pumps in extremely critical process applications where extended downtime is unacceptable. For these customers,FLP will assist in setting-up spare parts programs to ensure availability.

III. REPAIR/REBUILD WORK

A. CONSIDER OUR SERVICES

In recent years, economic conditions have forced the industrial community into a greater wareness of production and overhead costs. In order to remain competitive, many peripheral functions, such as maintenance, have been reduced or eliminated. Companies are now turning to outside vendors for this type of support. They have found this to be more cost-effective than maintaining their own repair forces and facilities.

If your company is currently sending pumps outside for maintenance, there are a few questions you should ask yourself when deciding whether or not to send them to a local repair facility or to the original equipment manufacturer (OEM):

1. How much experience does the repair facility have in pump repair work?

2. How qualified are their welders to work on the special metallurgies involved?

3. Do they work to OEM tolerances or do they merely copy dimensions from OEM parts?

4. What kind of warranty do they give with their work?

5. Will they treat the cause of the problem or just the result? Do they have the engineering capabilities to help solve your problems?

We feel that once you have answered these questions, you will agree that the OEM is the most suitable place to have your pump repaired.

At FLP, we provide the same excellence on repair and rebuild work as supplied on our new pumps. In fact, we have so much confidence in the quality of our workmanship, that we provide the same warranty on our rebuilds as we give to our new pumps...regardless of the age or condition of the pump when it arrives at our facility.

However, our service capabilities go far beyond equipment overhaul. When you purchase a Flowserve Lawrence pump, you also receive a fully-staffed Engineering Department ready to answer your questions, troubleshoot problems and engineer design modifications to keep pace with your growing and changing process demands.

When you return a Lawrence pump to us, you will have the confidence of knowing that you will be getting something no one else can give: OEM technology, parts and workmanship.

FLOWSERVE
Lawrence Pumps®
371 Market Street, Lawrence, MA 01843-1595 • Tel: (978) 682-5248 • Fax: (978) 975-4291

Revision 0

LONG TERM STORAGE INSTRUCTIONS

INTRODUCTION

The intent of this Long Term Storage Instruction is to establish standards for storing of pumps only for longer than six months. These instructions should be followed for installed pumps prior to start up as applicable.

ITEM 1

Pump should be carefully dried internally with hot air or by a vacuum-producing device to avoid rusting of internal parts.

ITEM 2

Once free of moisture, the pump internals should be coated with a rust protective liquid.

ITEM 3

Packing – Crated skids with pump wrapped in polyethylene contain desiccant to keep the unit dry. The protective flange cover and coating should remain on the pump.

ITEM 4

Store the pump indoors in a heated controlled temperature environment. Storage area must be free of ambient vibration.

ITEM 5

All accessible parts, such as couplings and bearings, should be dismantled, dried, and coated with Vaseline or acid-free oil and then properly tagged and stored.

ITEM 6

For oil lubricated bearings, fill the pump bearing frame with oil all the way to the top, and then drain the oil to the normal operating level. Use the oil specified in the Flowserve-Lawrence Pumps Installation, Operation, and Maintenance manual, section "Pump Lubrication and cooling". This oil should be changed to pump startup.

ITEM 7

FLOWSERVE
Lawrence Pumps
371 Market Street, Lawrence, MA 01843-1595 • Tel: (978) 682-5248 • Fax: (978) 975-4291

Mechanical seals – Oil on the seal faces can cause the faces to stick together during long periods of non-running. For long-term storage, remove any lubricant that might have been placed on the faces by seal manufacturer.

ITEM 8

Rotate the pump shaft by hand every two weeks. If the box needs to be modified to accomplish this task, it will be the responsibility of the customer. The polyethylene wrap on the pump must be resealed if broken for rotation.

ITEM 9

Consult the electric motor, steam turbine, and gear reducer, and lube oil station, etc. manufacturers or equipment manuals for their recommendations concerning long term storage of their products.

ITEM 10

If rust preventive has been used on stored parts, it should be removed completely, before final installation, and the bearings should be relubricated.

ITEM 11

In any case, where storage is greater than twelve months, a Flowserve-Lawrence Pumps Service Engineer should be contacted prior to startup to assure serviceability of equipment. The warranty is valid only if the customer follows the following conditions:

a) **The pump is stored and maintained in an "as shipped condition" in accordance with Flowserve-Lawrence Pumps recommended practice and procedures outlined in Items 1 through 11.**
b) **Prior to being placed in service the pump shall, at the customer and/or user's expense, be checked by a Flowserve-Lawrence Pumps Service Engineer to ensure that it is in an "as shipped condition".**
c) **If the pump is found to have deteriorated from an "as shipped condition", it shall be returned to that condition at the customer and/or user's expense.**

SECTION 3:
INSTALLATION, OPERATION AND MAINTENANCE INFORMATION

FLOWSERVE

Lawrence Pumps

USER INSTRUCTIONS

Lawrence Pumps HPX6000

Fully Lined Slurry Pump

PCN=26999974
Original Instructions

Installation
Operation
Maintenance

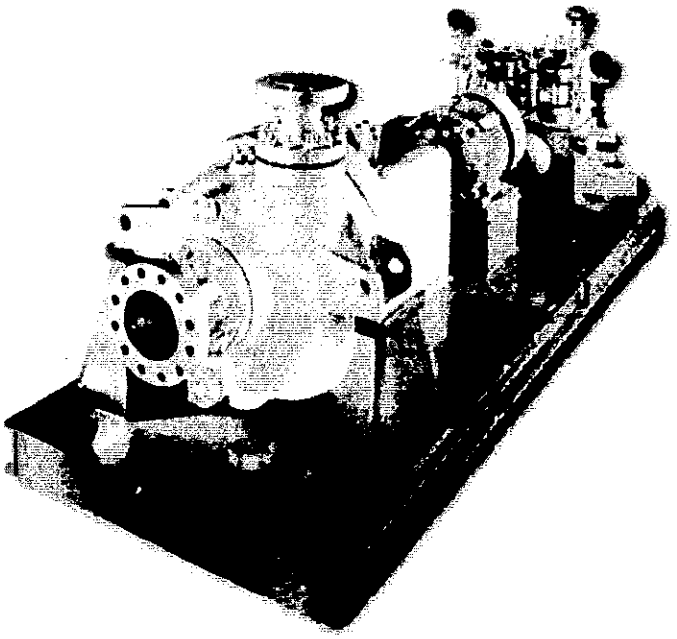

⚠ ***These instructions must be read prior to installing, operating, using and maintaining this equipment.***

CONTENTS

PAGE

CONTENTS

1 INTRODUCTION AND SAFETY 2
1.1 General 2
1.2 CE marking and approvals 2
1.3 Disclaimer 2
1.4 Copyright 2
1.5 Duty conditions 3
1.6 Safety 3
1.7 Noise level 6

2 TRANSPORT AND STORAGE 7
2.1 Consignment receipt and unpacking 7
2.2 Handling 7
2.3 Lifting 7
2.4 Storage 8
2.5 Recycling and end of product life 9

3 INSTALLATION PROCEDURES 10
3.1 Pre-Installation Check 10
3.2 Pump Location 10
3.3 Pump Preparation 10
3.4 Pump Leveling 10
3.5 Driver Installation 11
3.6 Pump And Coupling Device Alignment 11
3.7 Piping System 12
3.8 Suction Piping 12
3.9 Discharge Piping 12

4 PUMP LUBRICATION AND COOLING 12
4.1 Installation Of Constant-Level Oilers 13
4.2 Internal And External Lubrication Systems .. 13

5 BEARING HANDLING AND MOUNTING 13
5.1 Thrust Bearings 14
5.2 Radial Bearings 14
5.3 Proper Handling Of Ball And Roller Bearings 14

6 PUMP DRIVERS 15
6.1 Installation 15
6.2 Maintenance 15

7 COUPLING DEVICES 15
7.1 Installation 15
7.2 Maintenance 15
7.3 Troubleshooting 15

8 MECHANICAL SEAL 16
8.1 Installation 16
8.2 Maintenance 16

PAGE

9 START-UP AND SHUTDOWN PROCEDURES . 16
9.1 Pre-Start-Up Inspection 16
9.2 Start-Up Sequence 17
9.3 Warm Up 17
9.4 Priming 20
9.5 Start-Up 20
9.6 Pump Performance 20
9.7 Shutdown Procedures 20

10 TROUBLESHOOTING PUMP PROBLEMS 20
10.1 No Discharge 20
10.2 Insufficient Discharge 20
10.3 Insufficient Pressure 21
10.4 Excessive Power Consumption 21
10.5 Cavitation 21
10.6 Vibration 21
10.7 Premature Bearing Failure 21

11 DISASSEMBLY AND REASSEMBLY 22
11.1 Disassembly Instructions 22
11.2 Reassembly Instructions 23
11.3 Impeller Clearance Adjustment 23

12 SPARE PARTS 24

13 WARRANTY 25

1 INTRODUCTION AND SAFETY

1.1 General

⚠ ***These instructions must always be kept close to the product's operating location or directly with the product.***

Lawrence Pumps Flowserve's products are designed, developed and manufactured with state-of-the-art technologies in modern facilities. The unit is produced with great care and commitment to continuous quality control, utilising sophisticated quality techniques, and safety requirements.

We are committed to continuous quality improvement and being at your service for any further information about the product in its installation and operation or about its support products, repair and diagnostic services.

These instructions are intended to facilitate familiarisation with the product and its permitted use. Operating the product in compliance with these instructions is important to help ensure reliability in service and avoid risks. The instructions may not take into account federal, state, local or company regulations; ensure such regulations are observed by all, including those installing the product. Always coordinate repair activity with operations personnel, and follow all plant safety requirements and applicable safety and health laws and regulations.

⚠ ***These instructions shall be read prior to installing, operating, using and maintaining the equipment in any region world-wide. The equipment must not be put into service until all the conditions relating to safety noted in the instructions, have been met.***

1.2 CE marking and approvals

It is a legal requirement that machinery and equipment put into service within certain regions of the world shall conform with the applicable CE Marking Directives covering Machinery and, where applicable, Low Voltage Equipment, Electromagnetic Compatibility (EMC), Pressure Equipment Directive (PED) and Equipment for Potentially Explosive Atmospheres (ATEX).

Where applicable, the Directives and any additional Approvals, cover important safety aspects relating to machinery and equipment and the satisfactory provision of technical documents and safety instructions. Where applicable this document incorporates information relevant to these Directives. To confirm the approvals applying and if the product itself is CE marked, check the serial number plate and the Certification provided.

1.3 Disclaimer

Information in these User Instructions is believed to be reliable. In spite of all the efforts of Flowserve Corporation to provide sound and all necessary information the content of this manual may appear insufficient and is not guaranteed by Flowserve as to its completeness or accuracy.

Lawrence Pumps Flowserve manufactures products to exacting International Quality Management System Standards as certified and audited by external Quality Assurance organisations. Genuine parts and accessories have been designed, tested and incorporated into the products to help ensure their continued product quality and performance in use. As Lawrence Pumps Flowserve cannot test parts and accessories sourced from other vendors the incorrect incorporation of such parts and accessories may adversely affect the performance and safety features of the products. The failure to properly select, install or use authorised Lawrence Pumps Flowserve parts and accessories is considered to be misuse. Damage or failure caused by misuse is not covered by Lawrence Pumps Flowserve's warranty. In addition, any modification of Lawrence Pumps Flowserve products or removal of original components may impair the safety of these products in their use.

1.4 Copyright

All rights reserved. No part of these instructions may be reproduced, stored in a retrieval system or transmitted in any form or by any means without prior permission of the Flowserve Pump Division or Lawrence Pumps Flowserve.

1.5 Duty conditions

This product has been selected to meet the duty conditions indicated in pump data sheet. The acknowledgement of these conditions has been confirmed by pump manufacturer by filling the relevant data sheet.

⚠ ***The product must not be operated beyond the parameters specified for the application. If there is any doubt as to the suitability of the product for the application intended, contact Lawrence Pumps Flowserve for advice, quoting the serial number.***

If the conditions of service indicated on data sheet are going to be changed (for example liquid pumped, temperature or duty) it is requested that you/the user seek our written agreement before start up.

1.6 Safety

1.6.1 Summary of safety markings

These user instructions contain specific safety markings where non-observance of an instruction would cause hazards. The specific safety markings are:

⚠ **DANGER** This symbol indicates electrical safety instructions where non-compliance will involve a high risk to personal safety or the loss of life.

⚠ This symbol indicates safety instructions where non-compliance would affect personal safety and could result in loss of life.

☠ This symbol indicates "hazardous and toxic fluid" safety instructions where non-compliance would affect personal safety and could result in loss of life.

⚠ **CAUTION** This symbol indicates safety instructions where non-compliance will involve some risk to safe operation and personal safety and would damage the equipment or property.

Ex This symbol indicates explosive atmosphere marking according to ATEX. It is used in safety instructions where non-compliance in the hazardous area would cause the risk of an explosion.

Note: This sign is not a safety symbol but indicates an important instruction in the assembly process.

1.6.2 Personnel qualification and training

All personnel involved in the operation, installation, inspection and maintenance of the unit must be qualified to carry out the work involved. If the personnel in question do not already possess the necessary knowledge and skill, appropriate training and instruction must be provided. If required the operator may commission the manufacturer/supplier to provide applicable training.

Always coordinate repair activity with operations and health and safety personnel, and follow all plant safety requirements and applicable safety and health laws and regulations.

1.6.3 Safety action

This is a summary of conditions and actions to prevent injury to personnel and damage to the environment and to equipment. (For products used in potentially explosive atmospheres section 1.6.4 also applies.)

⚠ **CAUTION** PREVENT EXCESSIVE EXTERNAL PIPE LOAD

Do not use pump as a support for piping. Do not mount expansion joints, unless allowed by Lawrence Pumps Flowserve in writing, so that their force, due to internal pressure, acts on the pump flange.

⚠ **CAUTION** ENSURE CORRECT LUBRICATION

(See section 9, *Start-up and shutdown procedures.*)

⚠ **CAUTION** START THE PUMP WITH DISCHARGE VALVE AT LEAST PARTIALLY OPENED

(Unless otherwise instructed at a specific point in the user instructions.)

This is recommended to minimise the risk of overloading and damaging the pump and motor at full or zero flow. Pumps may be started with the valve further open only on installations where this situation cannot occur. The pump outlet control valve may need to be adjusted to comply with the

duty following the run-up process. (See section 9, *Start-up and shutdown procedures.*)

CAUTION NEVER RUN THE PUMP DRY

CAUTION INLET VALVES TO BE FULLY OPEN WHEN PUMP IS RUNNING
Running the pump at zero flow or below the recommended minimum flow continuously will cause damage to the pump itself and to the seal.

CAUTION DO NOT RUN THE PUMP AT ABNORMALLY HIGH OR LOW FLOW RATES
Operating at a flow rate higher than normal or at a flow rate with no back pressure on the pump may overload the motor and cause cavitation. Low flow rates may cause a reduction in pump/bearing life, overheating of the pump, instability and cavitation/ vibration.

CAUTION CONTROL OF HAZARDOUS ENERGY
Appropriate Lock Out/Tagout procedures should be applied when any potential energy source is exposed on the pump during setup, service and or maintenance to prevent worker injury and or fatality.

DANGER NEVER DO MAINTENANCE WORK WHEN THE UNIT IS CONNECTED TO POWER

DANGER ELECTRICAL CONNECTIONS
Electrical connections should only be made by trained personnel with appropriate safety equipment utilizing appropriate Lockout/ Tagout procedures.

HAZARDOUS LIQUIDS
When the pump is handling hazardous liquids care must be taken to avoid exposure to the liquid by appropriate siting of the pump, limiting personnel access and by operator training. If the liquid is flammable and/or explosive, strict safety procedures must be applied.

DRAIN THE PUMP AND ISOLATE PIPEWORK BEFORE DISMANTLING THE PUMP
The appropriate safety precautions should be taken where the pumped liquids are hazardous.

FLUORO-ELASTOMERS (When fitted.)
When a pump has experienced temperatures over 250 °C (482 °F), partial decomposition of fluoro-elastomers (eg Viton) will occur. In this condition these are extremely dangerous and skin contact must be avoided.

HANDLING COMPONENTS
Many precision parts have sharp corners and the wearing of appropriate safety gloves and equipment is required when handling these components. To lift heavy pieces above 25 kg (55 lb) use a crane appropriate for the mass and in accordance with current local regulations.

GUARDS MUST NOT BE REMOVED WHILE THE PUMP IS OPERATIONAL
The unit must not be operated unless coupling guard is in place. Failure to observe this warning could result in injury to operating personnel.

THERMAL SHOCK
Rapid changes in the temperature of the liquid within the pump can cause thermal shock, which will result in damage or breakage of components and shall be avoided.

NEVER APPLY HEAT TO REMOVE IMPELLER
Trapped lubricant or vapour could cause an explosion.

HOT (and cold) PARTS
If hot or freezing components or auxiliary heating supplies can present a danger to operators and persons entering the immediate area action must be taken to avoid accidental contact. If complete protection is not possible, the machine access must be limited to maintenance staff only, with clear visual warnings and indicators to those entering the immediate area. Note: bearing housings must not be insulated and drive motors and bearings may be hot.
If the temperature is greater than 68 °C (175 °F) or below 5 °C (20 °F) in a restricted zone, or

exceeds local regulations, action as above shall be taken.

1.6.4 Products used in potentially explosive atmospheres

Ex Measures are required to:

- Avoid excess temperature
- Prevent build up of explosive mixtures
- Prevent the generation of sparks
- Prevent leakages
- Maintain the pump to avoid hazard

The following instructions for pumps and pump units when installed in potentially explosive atmospheres must be followed to help ensure explosion protection. Both electrical and non-electrical equipment must meet the requirements of European Directive 94/9/EC.

1.6.4.1 Scope of compliance

Ex Use equipment only in the zone for which it is appropriate. Always check that the driver, drive coupling assembly, seal and pump equipment are suitably rated and/or certified for the classification of the specific atmosphere in which they are to be installed.

Where Lawrence Pumps Flowserve has supplied only the bare shaft pump, the Ex rating applies only to the pump. The party responsible for assembling the pump set shall select the coupling, driver and any additional equipment, with the necessary CE Certificate/ Declaration of Conformity establishing it is suitable for the area in which it is to be installed.

The output from a variable frequency drive (VFD) can cause additional heating affects in the motor and so, for pumps sets with a VFD, the ATEX Certification for the motor must state that it is covers the situation where electrical supply is from the VFD. This particular requirement still applies even if the VFD is in a safe area.

1.6.4.2 Marking

An example of ATEX equipment marking is shown below. The actual classification of the pump will be engraved on the nameplate. Ex **II 2 GD c IIC 135 °C (T4)**

1.6.4.3 Avoiding excessive surface temperatures

Ex ENSURE THE EQUIPMENT TEMPERATURE CLASS IS SUITABLE FOR THE HAZARD ZONE
Pumps have a temperature class as stated in the ATEX Ex rating on the nameplate. These are based on a maximum ambient of 40 °C (104 °F); refer to Lawrence Pumps Flowserve for higher ambient temperatures.

The surface temperature on the pump is influenced by the temperature of the liquid handled. The maximum permissible liquid temperature depends on the temperature class and must not exceed the values in the table that follows.

The temperature rise at the seals and bearings and due to the minimum permitted flow rate is taken into account in the temperatures stated.

Temperature class to EN 13463-1	Maximum surface temperature permitted	Temperature limit of liquid handled (* depending on material and construction variant - check which is lower)
T6	85 °C (185 °F)	Consult Flowserve
T5	100 °C (212 °F)	Consult Flowserve
T4	135 °C (275 °F)	115 °C (239 °F) *
T3	200 °C (392 °F)	180 °C (356 °F) *
T2	300 °C (572 °F)	275 °C (527 °F) *
T1	450 °C (842 °F)	400 °C (752 °F) *

The responsibility for compliance with the specified maximum liquid temperature is with the plant operator.

Temperature classification "Tx" is used when the liquid temperature varies and when the pump is required to be used in differently classified potentially explosive atmospheres. In this case the user is responsible for ensuring that the pump surface temperature does not exceed that permitted in its actual installed location.

If an explosive atmosphere exists during the installation, do not attempt to check the direction of rotation by starting the pump unfilled. Even a short run time may give a high temperature resulting from contact between rotating and stationary components.

Where there is any risk of the pump being run against a closed valve generating high liquid and casing external surface temperatures it is recommended that users fit an external surface temperature protection device.

Avoid mechanical, hydraulic or electrical overload by using motor overload trips, temperature monitor or a power monitor and make routine vibration monitoring checks.

In dirty or dusty environments, regular checks must be made and dirt removed from areas around close clearances, bearing housings and motors.

1.6.4.4 Preventing the build up of explosive mixtures

Ex ENSURE THE PUMP IS PROPERLY FILLED AND VENTED AND DOES NOT RUN DRY

Ensure the pump and relevant suction and discharge pipeline system is totally filled with liquid at all times during the pump operation, so that an explosive atmosphere is prevented. In addition it is essential to make sure that seal chambers, auxiliary shaft seal systems and any heating and cooling systems are properly filled.

If the operation of the system cannot avoid this condition the fitting of an appropriate dry run protection device is recommended (eg liquid detection or a power monitor).

To avoid potential hazards from fugitive emissions of vapour or gas to atmosphere the surrounding area must be well ventilated.1.6.4.5 Preventing sparks

Ex To prevent a potential hazard from mechanical contact, the coupling guard must be non-sparking and anti-static for Category 2.

To avoid the potential hazard from random induced current generating a spark, the earth contact on the baseplate must be used.

Avoid electrostatic charge: do not rub non-metallic surfaces with a dry cloth; ensure cloth is damp.

The coupling must be selected to comply with 94/9/EC and correct alignment must be maintained.

1.6.4.5 Preventing sparks, heat and or flames

1.6.4.6 Preventing leakage

Ex The pump must only be used to handle liquids for which it has been approved to have the correct corrosion resistance.

Avoid entrapment of liquid in the pump and associated piping due to closing of suction and discharge valves, which could cause dangerous excessive pressures to occur if there is heat input to the liquid. This can occur if the pump is stationary or running.

Bursting of liquid containing parts due to freezing must be avoided by draining or protecting the pump and ancillary systems.

Where there is the potential hazard of a loss of a seal barrier fluid or external flush, the fluid must be monitored.

If leakage of liquid to atmosphere can result in a hazard, the installation of a liquid detection device is recommended.

1.6.4.7 Maintenance to avoid the hazard

Ex CORRECT MAINTENANCE IS REQUIRED TO AVOID POTENTIAL HAZARDS WHICH GIVE A RISK OF EXPLOSION

The responsibility for compliance with maintenance instructions is with the plant operator.

To avoid potential explosion hazards during maintenance, the tools, cleaning and painting materials used must not give rise to sparking or adversely affect the ambient conditions. Where there is a risk from such tools or materials, maintenance must be conducted in a safe area.

1.7 Noise level

When pump noise level exceeds 85 dBA attention must be given to prevailing Health and Safety Legislation, to limit the exposure of plant operating personnel to the noise. The usual approach is to

control exposure time to the noise or to enclose the machine to reduce emitted sound. You may have already specified a limiting noise level when the equipment was ordered, however if no noise requirements were defined then machines above a certain power level will exceed 85 dBA. In such situations consideration must be given to the fitting of an acoustic enclosure to meet local regulations.

Pump noise level is dependent on a number of factors - the type of motor fitted, the operating conditions, pipework design and acoustic characteristics of the building.

2 TRANSPORT AND STORAGE

2.1 Consignment receipt and unpacking

Immediately after receipt of the equipment it must be checked against the delivery/shipping documents for its completeness and that there has been no damage in transportation. Any shortage and/or damage must be reported immediately to Lawrence Pumps Flowserve and must be received in writing within one month of receipt of the equipment. Later claims cannot be accepted.

Check any crate, boxes or wrappings for any accessories or spare parts that may be packed separately with the equipment or attached to side walls of the box or equipment.

Each product has a unique serial number. Check that the serial number indicated on the job user's instructions corresponds with the one engraved in pump nameplate and always quote this number and the Sales Order number in correspondence as well as when ordering spare parts or further accessories.

2.2 Handling

Boxes, crates, pallets or cartons may be unloaded using fork-lift vehicles or slings dependent on their size and construction.

2.3 Lifting

⚠ CAUTION

Make sure that any equipment used to lift the pump or any of its components is capable of supporting the weights encountered. Make sure that all parts are correctly rigged before attempting to lift.

⚠ A crane must be used for all pump sets in excess of 25 kg (55 lb). Fully trained personnel must carry out lifting, in accordance with local regulations. The driver and pump weights are recorded on general arrangement drawing included into the job user's instruction.

2.3.1 To Lift unit

Pump, driver and baseplate can be lifted as a unit. Sling from all four (4) lifting lugs welded onto baseplate side rails. Failure to use all four (4) could result in permanent distortion of the baseplate. Use as long a sling as possible, or use a spreader arrangement.

⚠ CAUTION ***Coupling bolting and spacer piece must be removed from between pump and driver half couplings before lifting baseplate with pumping element.***
To lift pump and baseplate, less driver, or baseplate alone, sling from all four (4) eye bolts.

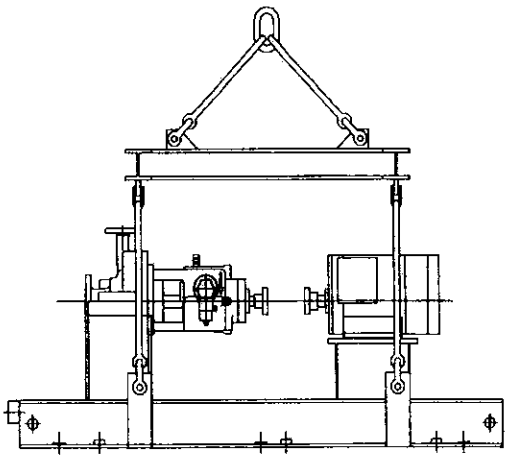

Figure 2.1

⚠ CAUTION ***Do not lift pump, motor, baseplate unit by slinging from pump casing and/or eye bolt on motor.***

2.3.2 To lift driver

Refer to driver Manufacturers Instructions.

2.3.3 To lift complete pump only

Use eye bolts on casing cover and bearing housing to lift the bareshaft pump. Only use lifting equipment with load capacity adequate for the pump weight. Please refer to the Pump General Arrangement Drawing for the weight.

2.4 Storage

⚠ CAUTION Store the pump in its shipping container in a clean, non corrosive, and dry and temperature controlled location away from vibration. Leave piping connection covers in place to keep dirt and other foreign material out of pump casing. Turn pump at intervals to prevent brinelling of the bearings and the seal faces, if fitted, from sticking.

Electric Motors (Pump Driver) should not be stored in damp places without special protection (Refer to Motor manufacturers instructions).

Improper storage of the pump could damage the pump internals and violate the conditions of its warranty.

2.4.1 Long term storage

Long term storage up to six months:

1. Indoor storage shall be used when possible.
2. All equipment and material shall be stored free from direct ground contact and away from areas subject to pooling water. As a minimum, lay-down areas shall be graveled areas.
3. For outdoor storage, even cross cut timber with at least 10 cm by 10 cm cross section, laid flat and level, can be used for lay-down. Warped timber is not acceptable.
4. Temporary protective covers installed at site shall allow for free air circulation to prevent humidity condensation and collection of water.
5. Attempt to preserve the integrity of the shipping packaging. Replace the packaging material after inspection.
6. Corrosive or wet atmospheres shall be avoided when possible.
7. Painted surfaces shall be periodically inspected and touched up as needed.
8. When stored in a working environment, physical protection shall be provided to protect the pump from operations such as concrete chipping, sanding, painting, and rigging. Stainless steel shall be protected from weld splatter and grinding dust of low alloy steel.
9. Dirt, ice, salt and other foreign matter shall be removed as soon as possible.
10. For oil lubricated pumps, fill the bearing housing to the bottom of the shaft with the appropriate oil.
11. Rotate the pump by hand 2 ¼ revolutions weekly. In cases where the pump is too stiff to turn by hand a strap wrench or other non marring device shall be used. The shaft must be rotated in the direction of normal rotation.
12. Consult the manufacturer's operation manual for any components provided with the pump package (motor, mechanical seal, lube station etc...) for specific storage instructions.

In cases where site storage will extend past six months the following additional steps are recommended.

1. All long term storage practices for up to six months listed above remain in place.
2. Mechanical seals
   a. Single – continue to maintain the seal dry.
   b. Double – fill the mechanical seal sections of the pump using the same oil type and grade as specified in the Mechanical Seal Support Systems section. Blind flanges will be required on the bottom seal connections, all other covers shall be replaced after filling.
3. For oil lubricated pumps, fill the bearing housing to the bottom of the shaft with VSI (Vapor Space Inhibiting) oil with an anti-rust compound. This corrosion inhibitor fills the vapor space above the oil level to form a rust preventive barrier on exposed metal surfaces. Continue to rotate the shaft as recommended above.

4. For long term storage of auxiliary equipment (motors, mechanical seals, lube oil consoles, etc.) see specific manufacturer's instruction manuals or directly contact the manufacturer for instructions.
5. All oils used in the bearing frame and the mechanical seals during storage must be drained and replaced with new, clean oil prior to pump start up.
6. For storage periods greater than twelve (12) month, a Lawrence Pumps Flowserve Service Engineer must be contracted to inspect the stored unit and to assure the equipment is still in "as shipped condition" prior to pump installation and start-up.

2.4.1.1 Inspection upon arrival

When the pump is received it shall be inspected for damage, contamination or other signs of rough handling. If any damage is found it shall be reported to the carrier immediately. Inspect the preservative coating on various parts. If necessary, renew preservative in areas where it has been rubbed or scraped.

Inspect all painted surfaces. If necessary, touch up the areas where paint has been chipped or scraped. Inspect all covers over pump openings and piping connections. If covers or seals for the covers are damaged or loose, they are to be removed, and a visual inspection made of the accessible interior areas for accumulation of foreign materials or water. If necessary, clean and preserve the interior parts as noted above to restore the parts to the "as shipped" condition. Install or replace covers and fasten securely.

2.4.1.2 Storage

⚠ CAUTION ***If at all possible, the pump and its component parts shall be stored indoors where they will be protected from the elements. In no case should any pump element be subjected to extended periods of submergence or wetting prior to start up. If it is not possible to store the pump and its components indoors, precautions must be taken to protect them from the elements. Regardless of whether storage is indoors or outside, the storage area shall be vibration free. All boxes marked for indoor storage shall be stored indoors. When stored outdoors the pump and its components shall be protected from dirt, dust, rain, snow, or other unfavourable conditions by heavy plastic sheets, canvas, waterproof burlap or other suitable coverings.***

All equipment must be placed upon skids or blocks to prevent contact with the ground and surface contaminants. Equipment must be adequately supported to prevent distortion and bending.
The pump shaft shall be rotated, in the direction of rotation, at least 1 and 1/4 turns each week during the storage period and any other periods of stand by.
When selecting a storage area the following shall be taken into consideration.

a) The deterioration of the equipment will be proportionate to the class of storage provided.
b) The expenses involved in restoring the equipment at time of installation will be proportionate to the class of storage provided.

2.4.1.3 Painting and preservation

Paints and preservatives used are either Lawrence Pumps Flowserve standard or 'special' as required by the contract specification. Refer to Lawrence Pumps Flowserve for the description of paints and preservatives used on this order if needed

2.4.1.4 Associated equipment

Motors, Turbines, Gears, etc., being supplied by Lawrence Pumps Flowserve.
Generally rotors of associated equipment shall be blocked to relieve bearing loads. Storage shall be indoors and dry. See the specific manufacturers storage requirements.

2.5 Recycling and end of product life

At the end of the service life of the product or its parts, the relevant materials and parts should be recycled or disposed using an environmentally acceptable method and in accordance with local regulations. If the product contains substances which are harmful to the environment, these should be removed and disposed in accordance with

current local regulations. This also includes the liquids and/or gases that are used in the "seal system" or other utilities.

Make sure that hazardous substances are disposed of safely and that the correct personal protective equipment is used. The safety specifications must be in accordance with the current local regulations at all times.

3 INSTALLATION PROCEDURES

It is recommended that a Lawrence Pumps Flowserve Service Engineer oversee the initial installation and start-up of the pump. Having a Lawrence Pumps Flowserve Service Engineer on-site will ensure that the pump is properly and safely installed. In addition, a Lawrence Pumps Flowserve Service Engineer will be able to provide authoritative information concerning start-up, operation, and safety issues.

CAUTION ***For pump operation, do not use the flanges, gaskets, and bolting intended for shipping purposes only.***

3.1 Pre-Installation check

Prior to beginning the installation process, thoroughly inspect the pump and its related equipment, taking special care to note any handling-related or storage-related damage that might have occurred since the receiving inspection.

When Lawrence Pumps Flowserve prepares a pump for shipment, all tapped pipe connections are plugged and flanged pipe connections are covered with wood, metal, or plastic enclosures.

Equipment such as motors and couplings that are manufactured by other companies may have been similarly prepared for shipment. Refer to the respective manuals and consult the Original Equipment Manufacturer (OEM) if in doubt.

3.2 Pump location

Locate the pump where there is sufficient space around the pump to permit access for routine maintenance and servicing work. Avoid areas in which dirt, dust, or moisture tend to collect.

Refer to the pump General Arrangement drawing for information on inlet and outlet connections and their functional purposes.

3.3 Pump preparation

Perform a final check of the pump and related equipment; check closely for any foreign matter that may have entered the pump during handling.

If the pump has been placed in storage for longer than six months, contact the Service Department at Lawrence Pumps Flowserve for instruction.

When installing the foundation anchor bolts, use bolts of the proper size. Use a pipe sleeve that is larger than the diameter of the bolts to permit movement during final positioning.

Carefully constructed templates are required to hold anchor bolts and sleeves in position while the foundation is being cast. These templates are usually made of wood and secured to the foundation forms. Set the anchor bolts to a tolerance of 1/8 inch (3 mm) by locating and drilling the holes in the templates after they have been secured to the braced forms.

After the concrete has been poured and has properly hardened, re-check each anchor bolt for correct positioning.

In those cases in which the pump assembly must be mounted on steel work or another structure other than a concrete foundation, the design must be sufficiently adequate to:

1. Safely support the pump assembly.
2. Not disturb the alignment of the pump, driver, and coupling
3. Not be subject to deflection.

3.4 Pump Leveling

When the pump and the driver have been shipped mounted on a base plate, in most cases the coupling spacer is shipped separately.

CAUTION ***Do not reconnect the coupling spacer until all leveling procedures have been completed. Serious damage to the pump***

internals can occur if the pump is coupled to its driver prior to leveling.

Support the base plate on rectangular metal blocks and shims or on metal wedges that have a slight taper.

⚠ ***Use all necessary precautions and safety equipment. Only use blocks, shims or wedges that are adequate.***

Level to within 0.002 in/ft (0,06 mm/m) before the pump assembly is secured. The machined pads on the base plate should be used as reference points for determining whether or not the criteria has been met. Use either an optical method for leveling or a precision level.

Allow a gap of approximately 0.75 inches to 1.5 inches (19 to 38 mm) between the base plate and the foundation for grouting.

3.5 Driver installation

Depending on the specifications of the order, the driver might have been mounted on the base plate at Lawrence Pumps Flowserve. In this case, the pump and driver were aligned before shipment to tolerances that allow for final alignment in the field.

⚠ CAUTION ***The final alignment must be performed on-site prior to start-up.***

If the driver is to be installed on-site, the mounting holes in the base plate have not been pre-drilled.

Consult the instructions supplied by the manufacturer of the driver for information on correct installation, operation, maintenance, and lubrication procedures

3.6 Pump and coupling device alignment

Even if your HPX6000 pump and its driver and coupling were mounted on a baseplate and aligned at Lawrence Pumps Flowserve, it must be realigned prior to start-up.

Because it is virtually impossible to perfectly align a pump and its driver, a flexible coupling is always used to link the two. A flexible coupling compensates for minor temperature changes and for end movement of shafts.

⚠ CAUTION ***Correct alignment of the pump and driver is of the utmost importance***

There are two forms of misalignment between the pump shaft and the driver shaft:

1. *Angular misalignment*, in which the shafts are concentric but not parallel;
2. *Parallel misalignment*, in which the shafts are parallel but not concentric.

The standard minimum misalignment values given by coupling manufacturers are typically too high for this type of an application. In order to correctly check the alignment of the two shafts, you will need to use one of two methods: a reverse dial indication or a rim and face indication.

Consult the outline drawing for the distance between the ends of the shafts.

In the case of pumps that have been equipped with flexible couplings, consult the instructions provided by the manufacturer of the coupling for the correct minimum dimension allowable between the two halves. Any misalignment of a coupling in squareness or concentricity greater than 0.002 inches (0.05 mm) might cause coupling unbalance, and result in abnormal wear of the coupling, bearings, and mechanical seals.

After the alignment procedure has been completed, but before the coupling halves have been connected, "bump" the motor for no more than two seconds in order to check for the proper direction of rotation. Improper rotation might cause damage to both the pump and the driver.

⚠ ***Never operate the driver unless all protective guards are in place.***

3.7 Piping system

⚠ CAUTION *Sound piping practices shall be followed when designing and installing the piping system for the HPX6000 pump. The piping shall not place excessive strain on the pump flanges. All the piping sections must therefore be properly supported so that their weight does not bear on the pump flanges.*

In calculating the forces and moments created by the piping, the weights of the pipe, the contained fluid, and any insulation, must all be considered.

In addition, the piping system for the pump must be designed to accommodate thermal expansion and contraction without placing excessive strain on the pump flanges. If an expansion joint is installed in the piping between the pump and the nearest anchor in the piping system, a pipe anchor shall be installed between the expansion joint and the pump to absorb the axial force that may be generated.

Begin the installation of the piping system by removing the protective covers from the pump suction and discharge nozzles. Check to make certain that the mating surfaces are clean and in good condition.

Align the suction and discharge pipe flanges so that they are concentric with and parallel to the pump flanges. The piping must be supported independently near the pump, and all flanges must match. When tightening the bolts and nuts that fasten the flanges together, use the wheel method to ensure even compression of the gasket.

⚠ CAUTION *Do not use the pump as a pipe anchor. Do not pry against the bolt holes in the flanges in order to align the flanges and bolt holes.*

3.8 Suction Piping

The suction piping must have enough positive suction head to prevent cavitation. The NPSH available must always be greater than the NPSH required. If necessary, provide breakers in the suction vessel to prevent vortex formation. The suction piping must be free of air pockets. The function of the valve in the suction line is to isolate the pump from the system during maintenance. It is <u>not</u> to be used as a flow control valve.

The velocity in the suction piping shall be constant or increasing as the flow approaches the pump. The maximum recommended velocity at any point in the suction piping is 8 ft/sec (2.5 m/s). Higher velocities are acceptable providing the piping design delivers a smooth inlet flow to the pump suction. There shall be no flow disturbing fittings closer than 5 pipe diameters from the pump inlet.

The suction pipe size is usually a larger diameter than the suction flange on the pump. In such cases, an eccentric reducer is fitted to accommodate the diff-erence in pipe size. The flat side of the eccentric reducer shall be located on the top.

A suction header, also called a suction manifold, is required when two or more pumps are fed from one common suction intake. Take-offs directly opposite each other are not allowed. The maximum velocity allowed in the suction header is 8 ft/sec (2.5 m/s). If the ratio of the take off diameter to the header diameter is equal to or greater than 0.3, then the minimum spacing between take-offs is 2 header diameters. If that same ratio is less than 0.3, the minimum spacing between take-offs is 3 header diameters.

A duplex strainer arrangement shall be installed in the suction piping. The suction strainers shall be cleaned whenever there is any indication of a reduction in discharge pressure. Failure to clean the strainer can result in cavitation, loss of flow, and subsequent pump failure.

3.9 Discharge piping

A check valve and a gate valve must be installed in the discharge line. Locate the check valve between the gate valve and the pump. The check valve protects the pump from running backwards when the pump is shut down. The gate valve is used in starting the pump, to prevent the pump from running out on the curve as the system is being filled. The gate valve is also used to isolate the system when the pump is removed for maintenance.

An increaser is used on the discharge side to increase the size of the discharge piping. They shall be located between the check valve and the pump to prevent undersizing the valve.

⚠ CAUTION *If increasers or decreasers are used, position them so that they will not create air pockets.*

4 PUMP LUBRICATION AND COOLING

Correct lubrication of the pump bearings is critically important to the proper operation of the pump and to its longevity in service.

⚠ CAUTION ***Pumps that require oil lubrication are shipped with the bearing housings empty of oil. The proper lubricant must be added prior to operating the pump. Failure to do so will result in serious damage of the pump.***

The pump bearing frame must be filled with neutral mineral oil having a viscosity similar or equal to an ISO VG 68. The oil shall be rust-inhibited, oxidation-inhibited and anti-foaming. Properly selected synthetic lubricants may also be utilized.

The oil level height in the pump bearing frame is indicated on the assembly drawing provided with the pump. A visual indicator such as a sight glass, oil sight bottle, a constant level oiler or combination is provided to verify the condition and level of the oil.

⚠ CAUTION ***The oil level must be maintained at all times for proper lubrication.***

Oil is subject to gradual deterioration resulting from use and contamination. The oil in the pump bearing frame must be changed every six months or after every 2,500 hours of operation, whichever occurs first. Properly selected synthetic lubricants can allow for longer intervals between oil changes.

A variety of cooling configurations are available for the HPX6000 pump depending on the design requirements of the application. These may include internal or external heat exchangers, and jacketed bearing frames and pedestals. Information on the water flow rate, temperature, pressure and location of connections are located on the General Arrangement drawing. Higher flow rates and pressures may be required to maintain acceptable temperature ranges. The cooling water must be turned on prior to warm-up of the pump.

4.1 Installation of constant level oilers

Lawrence Pumps Flowserve supplies some HPX6000 pumps with constant-level oilers. Oiler brands and construction details may vary, but the operation of the oilers will generally remain the same.

Refer to the enclosed manufacturer's installation and operation instructions.

4.2 Internal and external lubrication

Depending upon the design of your Lawrence Pumps Flowserve HPX6000 pump, there may be either an internal or an external lube oil supply for the bearing frame. Either arrangement may be supported by a purge oil mist system.

In the case of pumps supplied with internal lubrication systems, the pump may use a flooded sump or oil rings to deliver oil to the bearings. In the case of oil ring lubrication, ports are provided to allow visual inspection of the oil rings while the pump is operating. Refer to the Cross Sectional and General Arrangement drawing for any requirements specific to internal lubrication systems.

For some high temperature applications that use large pumps, pump lubrication is achieved by means of an external cooling circulation system. This includes a lube oil pump and motor, and other accessories depending on the specific project requirements. For additional information refer to the Cross Sectional and General Arrangement drawings and the literature supplied by the manufacturer of the lubrication system.

5 BEARING HANDLING AND MOUNTING

Lawrence Pumps Flowserve uses various combinations of rolling element thrust and radial bearings in its HPX6000 pumps, depending on the performance demands of each application.

Before mounting bearings, first thoroughly familiarize yourself with the bearing manufacturer's installation instructions.

Long bearing life is dependent on careful handling and installation, and on effective lubrication.

5.1 Thrust Bearings

Refer to the Cross Sectional drawing and the parts list for the proper size, make, and orientation of the bearings for the pump.

Before mounting any bearings, check the pump Cross Sectional and General Arrangement drawings to determine if the rotating element design has housings, covers, or slingers that need to be installed on the shaft prior to mounting the bearings.

Angular-contact thrust bearings must be mounted as shown in the Cross Sectional drawing. Pay special attention to any requirement for spacers or other mounting accessories if applicable.

⚠ CAUTION *When installing a new set of angular-contact thrust bearings in a HPX6000 pump, first check that the bearings are intended for use as a set.*

The bearings are mounted on the shaft with an interference fit between the inside diameter of the bearing and the outside diameter of the shaft. The bearings must therefore be heated prior to installation in order to increase the inside diameter.

Use a suitable bearing heater to heat the bearings. Bearing heaters can be obtained from most major bearing manufacturers, as well as from specialty manufacturers of such equipment. Either an oil-bath heater or an induction heater is recommended.

⚠ CAUTION ***Under no circumstances should bearings be heated with a torch or in a conventional oven. Such treatment will result in permanent damage to the bearings.***

Prior to mounting, the bearings must be heated to at least 230 Deg F. (105 Deg C.). Once the bearings have reached the correct temperature, use a pair of thick, insulated gloves to slide them onto the shaft and into their proper location. Tighten the locknut by hand against the bearing to ensure the bearing stays in place until it is sufficiently cooled and shrunk on the shaft. When the bearings are cool, remove the locknut, install the bearing locknut washer, and reinstall the locknut, then tighten the locknut.

It is extremely important to eliminate any axial clearance between the inner races and the shaft shoulder. Clearance in this area will cause the pump to vibrate.

The axial clearance between the housing and the outer bearing race should measure .000" to .010" (0,0mm to 0,25mm). To achieve the proper axial clearance, the bearing cover (p/n:3260.1) is machined and/or the thickness of the gasket (p/n:4590.1) is modified. Shims are not required to obtain the axial clearance.

5.2 Radial Bearings

Prior to mounting, the bearing must be heated to at least 230Deg F (105Deg C) with a bearing induction heater. Use a pair of thick, insulated gloves to slide the bearing onto the shaft pushing the bearing against the shaft shoulder for at least 30 seconds or until the inner race is shrunk on the shaft.

5.3 Proper handling of ball and roller bearings

Consult the literature supplied by the bearing manufacturer for detailed information on the handling and care of ball and roller bearings.

⚠ CAUTION ***Lawrence Pumps Flowserve requires the following when handling ball and roller bearings:***

1. Work with clean tools in clean surroundings.
2. Keep bearings tightly wrapped in oil-proof paper when they are not in use.
3. Only handle bearings with clean, dry hands.
4. If bearings must be laid down, place them on clean paper.
5. If bearings are to be wiped, use clean, lint-free cloths.
6. Thoroughly clean the inside of the housings before installing bearings.
7. Treat a used bearing as carefully as a new one.
8. Protect disassembled bearings from dirt and moisture.

9. Keep bearing lubricants clean when applying them, and cover lubricant containers when not in use.
10. Never expose bearings to moisture, dirt, or other contaminants at any time during handling or mounting.
11. Never use wooden mallets as installation tools.
12. Never use dirty, brittle, or chipped tools or work on dirty surfaces.
13. Never use compressed air to spin bearings.
14. Never use cotton waste or dirty rags to wipe a bearing.
15. Never scratch or nick bearing surfaces.
16. Never use any oil or grease that is not expressly intended for use as a bearing lubricant.
17. If bearings require cleaning, replace them with new bearings.

6 PUMP DRIVERS

The most common drivers for the HPX6000 pumps are 3-phase AC motors and steam turbines.

6.1 Installation

If the driver for the pump was not supplied by Lawrence Pumps Flowserve, be sure that the driver selected meets the specifications shown in the Lawrence Pumps Flowserve General Arrangement drawing.

Follow the driver manufacturer's instructions for mounting the driver to the base plate. The coupling alignment allowances given are usually greater than those recommended by Lawrence Pumps Flowserve.

CAUTION *Prior to coupling installation, be sure to check the direction of rotation of the driver.*

6.2 Maintenance

Typically, drivers such as industrial 3-phase AC motors require little maintenance. Follow the maintenance requirements for the installed driver that are given in the information supplied by the manufacturer.

CAUTION ***Drivers shall be protected from harmful chemicals and excessive temperatures. In addition, provision shall be made to allow for the free circulation of air around the driver.***

Few driver problems are related to the pump itself. Driver problems are more likely to be related to the coupling device, power supply, or functions of the dynamics of the application. If a driver problem is suspected, consult the Service Department at Lawrence Pumps Flowserve.

7 COUPLING DEVICES

The coupling supplied with your HPX6000 pump was selected to provide the highest level of performance for the specific application. A flexible element type coupling is always used.

For information concerning the installation and maintenance, consult the original manufacturer's installation guide.

7.1 Installation

The coupling has been provided per the purchase order instructions. Regardless of whether the coupling has been factory-installed or not, it will have to be aligned during the process of installing the pump.

Do not operate the pump without having first installed and secured all mechanical protections.

DANGER ***Do not operate the pump without having first installed and secured all electrical protections.***

7.2 Maintenance

Many flexible couplings require no maintenance. Some designs do require periodic grease lubrication.

Couplings shall be protected from chemicals and temperature extremes that can adversely affect the

coupling's flexible component. In addition, periodic inspection of couplings shall be a integral part of a preventive maintenance program.

7.3 Troubleshooting

The most common coupling-device-related problem is excessive pump vibration.

Repeat the alignment procedure. Check for any indications of movement of either the pump or the driver. Next, carefully check both shafts (i.e., the pump's input shaft and the driver's output shaft) for straightness. Also check for bearing wear.

8 MECHANICAL SEAL

The design of the mechanical seal that is utilized in the HPX6000 pump varies considerably. The mechanical seal has been selected by Lawrence Pumps Flowserve to match the performance requirements of the specific application.

Typical mechanical seal arrangements utilized are: single, dual pressurized or dual unpressurized seals and their appropriate support systems. In addition, a flush media is used in conjunction with a throat bushing at the inboard side of the stuffing box to decrease the accumulation of particles in the seal area.

A steam quench is utilized to prevent coking of the process media in the seal area in applications where relatively high temperature fluids are being pumped. Mechanical seal glands that conform to API-610 standards will have a vent and drain connection that functions to accommodate the steam quench.

CAUTION ***Keep mechanical seal connections covered until piping is ready to be connected.***

8.1 Installation

A mechanical seal is a precision component, and must be treated accordingly.

CAUTION

When replacing a mechanical seal, use only the specific make and model of seal that was originally furnished by Lawrence Pumps Flowserve.

If there are doubts concerning the suitability of a replacement mechanical seal, consult the Service Department at Lawrence Pumps Flowserve.

Only install suitable mechanical seals. Catastrophic seal failure could allow the pumpage to be released to the atmosphere.

8.2 Maintenance

Under normal operating conditions, mechanical seals do not require any maintenance or adjustment.

Most mechanical seals for slurry applications require a continuous supply of flush and/or cooling liquid. The liquid must be clean and free from any materials that could cause abrasion. For information on flow rates and pressures, refer to the General Arrangement drawing for the pump.

9 START-UP AND SHUTDOWN PROCEDURES

9.1 Pre-Start-up inspection

Before pump start-up, confirm that the installation procedures described above have been followed.

CAUTION ***Ensure that the pump, driver, coupling, piping, and other components have been correctly installed and aligned.***

As a minimum, the following are to be checked:

1. The pump bearing frame and constant-level oilers have been filled to the proper levels with the correct lubricants.
2. External lubrication reservoirs are filled with the proper lubricant. External lubrication systems are connected and operational.
3. Cooling systems are connected and operational.
4. Seal support systems are in place. Mechanical seal reservoirs are filled with the proper isolating

fluid. Mechanical seal flush systems are connected and operational.
5. Couplings that require lubrication have been properly lubricated.
6. The pump will be rotating in the correct direction.
7. Instruments are in proper calibration and are functional.

CAUTION ***Bump the motor for no more than two or three seconds while determining the direction of shaft rotation. Prolonged reverse rotation will likely cause severe damage. The coupling must not be connected during this procedure.***

CAUTION ***Turn the pump shaft by hand several rotations to confirm that the rotating element is free. There will be some resistance due to the friction caused by seals, and new bearings. If any rubbing noise occurs, discontinue the start-up procedure and report the problem to the Service Department at Lawrence Pumps Flowserve.***

CAUTION ***Check to make sure that all of the control and alarm systems are working correctly. All alarm point settings shall be verified.***

Check to make sure that all safety guards are securely in place.

9.2 Start-up sequence

Lawrence Pumps Flowserve recommends that a Lawrence Pumps Flowserve Service Engineer be on-site to supervise the start-up pro-cedure.

The start-up procedure for the HPX6000 pump is critical to the pump's long term performance. On high temperature services the casing and seal chamber must be gradually heated to avoid casing distortion and seal leakage. Gradual heating will also prevent thermal shocking of hard metal liners and impeller.

Prior to priming and starting the HPX6000 pump, auxiliary components on the pump must be turned on. The pump driver must not be started until all of the auxiliary components are in full operation.

Refer to the Notes and/or to the List of Connections on the General Arrangement drawing for a list of connections applicable to the pump.

1. If the pump uses force-feed oil lubrication of the bearings, turn on the force-feed oil lubrication system. Verify oil flow in the return line from the pump.
2. The air must be purged from the primary seal systems before start-up.
3. Turn on the barrier fluid to the dual mechanical seal if applicable.
4. Turn on the flush media to the pump throat bushing per the General Arrangment drawing. Adjust the flow rate and pressure as indicated in the Notes and/or List of Connections in the General Arrangement drawing.
5. Turn on the cooling water to all heat exchangers, jacketed bearing frames and pedestals as applicable.

9.3 Warm up

CAUTION ***The impeller and casing liners are made of 25% hard chrome material. These components are susceptible to damage from thermal shock. The pump components need to be heated at a rate of 150 oF (83 oC) differential per interval. At each temperature interval, the pump components should be allowed one hour to reach equilibrium with the preheat fluid.***

Local temperature indicators are used to monitor pump casing equilibrium.

The mechanical seal oil barrier/buffer system if applicable, and pump bearing frame shall be filled with lubricant to the proper operating levels. Cooling water shall be supplied to the mechanical seal oil barrier/buffer system and pump bearing frame prior to warm up.

<u>Condition 1</u>: Initial start-up with cold process fluid

Note: Special preheat precautions are not necessary if the pump gradually heats up with operation as the unit comes up to temperature and if the rate of rise is

at 150 oF (83 oC) differential or less. If this cannot be assured, then "Condition 2" shall be followed.

Condition 2: Initial start-up with hot process fluid

1 Ensure valves V1 thru V11 are closed. Also ensure the main discharge valve and suction valve are closed

2 Open V5, V6, V7, V8, and V9.

3 Slowly open V1 and allow temperature to equalize for one hour. Open V3 until pump casing is fully vented. Close V3.

4 Slowly open V2 mixing LCO cold with the LCO hot. Throttle V1 and V2 while monitoring temperature on TM1, TM2, TM3, TM4 and TM5. Continue to throttle until the temperature has increased by 150 oF (83 oC) differential maximum. Allow temperature to equalize for one hour.

5 Once the pump has reached 300 oF (150 oC), the steam quench should be turned on. Note: Under special circumstances, Step 5 may be ignored.

6 Throttle V1 and V2 while monitoring temperature on TM1, TM2, TM3, TM4 and TM5. Continue to throttle until the temperature has increased by 150 oF (83 oC) differential maximum. Allow temperature to equalize for one hour.

7 Repeat step 6 until temperature has been maintained within 150 oF (83 oC) differential of the process temperature.

8 The pump warm up is complete.

9 The pump is ready to be placed in standby condition. For instructions to maintain a pump in standby, see "Condition 3" below.

10 Prior to pump startup, the Plan 32 mechanical seal flush system must be operational. Slowly open V10. Ensure V1 thru V9 are closed. Throttle V11 for desired flow.

11 The unit is ready for startup procedure.

Condition 3: Maintaining pump in standby

1 If the pump is within 150 oF (83 oC) differential of the process temperature, then complete steps 2 thru 4 below to maintain pump in standby condition. If the pump is not within 150 oF (83 oC) differential of the process temperature, then complete "Condition 2 – Steps 1 thru 9" above.

2 Ensure V1 and V2 are throttled to maintain desired temperature. Ensure V5, V6, V7, V8 and V9 are open. Ensure V3, V4, V10 and V11 are closed.

3 Monitor temperature on TM1, TM2, TM3, TM4 and TM5 to insure it is maintained within 150 oF (83 oC) differential of main process temperature.

4 If the warm up fluid contains particulates, the pump must be run for a predetermined amount of time to prevent particulates from building up in the pump casing.

5 Prior to pump startup, the Plan 32 mechanical seal flush system must be operational. Slowly open V10. Throttle V11 for desired flow.

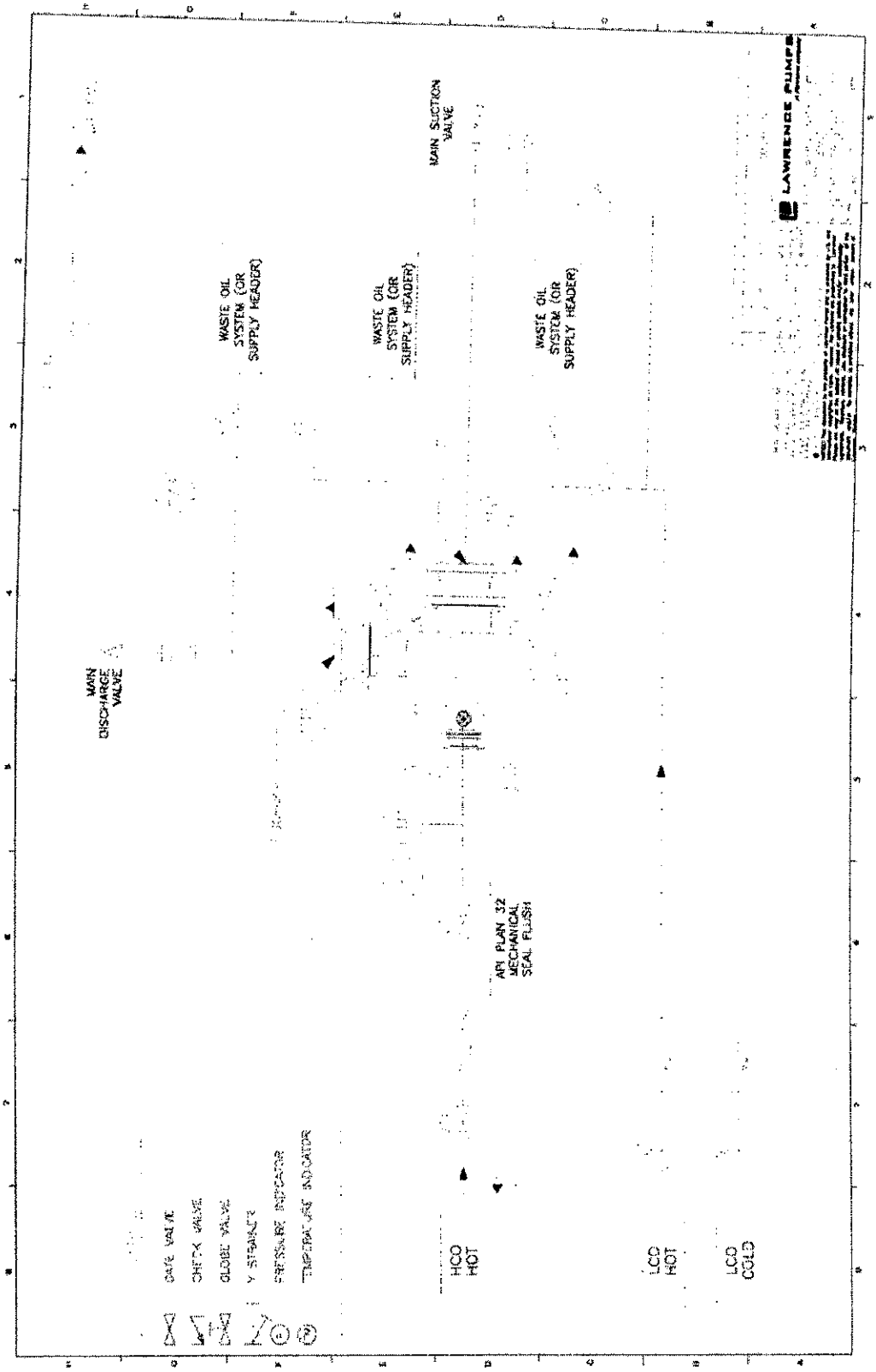
MAIN DISCHARGE VALVE
WASTE OIL SYSTEM (OR SUPPLY HEADER)
WASTE OIL SYSTEM (OR SUPPLY HEADER)
MAIN SUCTION VALVE
WASTE OIL SYSTEM (OR SUPPLY HEADER)
LAWRENCE PUMPS
GATE VALVE
CHECK VALVE
GLOBE VALVE
Y STRAINER
PRESSURE INDICATOR
TEMPERATURE INDICATOR
API PLAN 32 MECHANICAL SEAL FLUSH
HCO HOT
LCO HOT
LCO COLD

9.4 Priming

Close the pump discharge valve. Open the suction valve to allow the process fluid to fill the casing. Make certain that the vent line is connected to a suitable receiver. Open the casing vent valve slightly to bleed off any trapped air. Turn the rotating element by hand to make certain that the impeller is not rubbing the casing. When the casing is full, close the vent valve.

9.5 Start-up

Check to confirm that all safety guards are securely in place.

Start the pump with the discharge valve approximately 10% open. Open the discharge valve gradually until the system is full of process fluid. The discharge valve shall be completely open at about the same time as the system is 100% filled with process fluid. Make certain that the suction line is not throttled or restricted in any way during operation.

Typically, the piping will have been pressure tested prior to filling. Carefully check all flange joints and other connections for leaks. Tighten as necessary.

9.6 Pump performance

Check and monitor all of the flows and pressures to the auxiliary components. Adjust the flows and pressures as indicated in the Notes and/or List of Connections on the General Arrangement drawing. Use this list as a checklist.

⚠ CAUTION ***The pump driver shall be re-aligned to the pump once it has been brought up to its normal operating temperature.***

9.7 Shutdown Procedures

When shutting down the pump, proceed as follows:

1. Shut down the driver.
2. Close the discharge valve.
3. Close the suction valve.
4. Drain the pump casing
5. Allow the pump to cool down.
6. When the pump temperature drops down to ambient, turn off all the auxiliary components in the reverse sequence of start-up.

In cold weather the entire pump, including auxiliary components, shall be completely drained to prevent damage from freezing.

10 TROUBLESHOOTING PUMP PROBLEMS

The following troubleshooting suggestions are general in nature; they are intended to address a wide range of possible pump problems. Because these suggestions are intended to apply to a number of different types of Lawrence Pumps Flowserve pumps, some specific points may not be relevant for the pump.

For more detailed guidance concerning pump problems, please contact Lawrence Pumps Flowserve's Service Department.

10.1 No discharge

Lack of discharge from a pump may be caused by any of the following conditions:

1. The pump is not primed.
2. The speed is too low.
3. The system head is too high.
4. The impeller is clogged.
5. The pump is rotating in the wrong direction.
6. Suction strainer is plugged.

10.2 Insufficient discharge

Insufficient discharge from a pump may be due to any of the following problems:

1. The speed is too low.
2. The system head is higher than anticipated.
3. Insufficient NPSHA (net positive suction head available).
4. The impeller is either worn or clogged.
5. The pump is rotating in the wrong direction.
6. There is a suction line restriction.

7. There is material build-up on the pump internals.
8. The slurry concentration is too high.
9. The viscosity is higher than anticipated.

10.3 Insufficient pressure

If pump pressure is insufficient, look for any of the following conditions:

1. The speed is too low.
2. The system head is less than anticipated.
3. The pump is rotating in the wrong direction.
4. The impeller is either badly worn or corroded.
5. There is a restriction in the suction line.
6. There is material build-up in pump internals.
7. The slurry concentration is too high

10.4 Excessive power consumption

If the indications are that the pump is consuming power at an excessive rate, check for any of these problems:

1. The pump speed is too high.
2. The system head is higher than the rating; the flow is lower than specified.
3. Rotating element is binding.
4. The impeller is rubbing against the casing.
5. The shaft is bent.
6. The mechanical seal is using more power than anticipated.
7. Specific gravity is higher than anticipated.
8. Viscosity is higher than anticipated.
9. Concentration of solids is higher than anticipated.

10.5 Cavitation

Pump cavitation can be due to any of the following causes:

1. Insufficient NPSHA (net positive suction head available).
2. The pump is operating at a higher capacity than specified. Increased capacities require more NPSHA. Check the NPSHA.
3. The liquid temperature is too high and the pump is pulling gas instead of liquid.
4. The suction is partially plugged.
5. Liquid being pumped is boiling and there is insufficient NPSHA.

10.6 Vibration

The major frequency of the vibration can help to pinpoint the source of the problem. Here is a list of possible causes:

1. The pump is cavitating for any one of the reasons noted above, under the section titled "CAVITATION."
2. Pump bearings are worn.
3. The impeller is rubbing against the casing.
4. The shaft is binding.
5. The shaft is bent.
6. The rotating element (i.e., the shaft and the propeller) is out of balance.
7. Pump and the motor shaft coupling are out of alignment.
8. The bearings need lubrication.
9. Motor bearings are worn.
10. The pump has been improperly assembled, and some major pump parts are out of alignment with respect to concentricity.
11. The pump foundation is inadequate or it is not properly supported.
12. The pump suction or discharge piping is not properly supported, and it is transmitting hydraulic pipe vibrations back to the pump.
13. The foundation is transmitting vibrations from adjacent machinery.

10.7 Premature bearing failure

1. Bearing failure can be the result of a variety of problems. Check for any of the following conditions:
2. The bearings are receiving inadequate lubrication.
3. The bearings are being lubricated with the wrong type of oil for the pump load speed and the temperature involved.
4. The bearing housing or heat exchanger is receiving inadequate water cooling.
5. The oil filter needs to be changed.
6. A dusty (abrasive) atmosphere is contaminating the oil used for bearing lubrication.
7. The pump bearings are being flooded by the liquid that is being pumped.
8. Replacement bearings being used do not conform to Lawrence Pumps Flowserve's specifications.

9. The bearings have been improperly installed (e.g., not completely seated up against the shaft shoulder and/or properly secured to the shaft).
10. The bearings being used are improperly pre-loaded.
11. The pump is cavitating and imposing excessive vibration loads on the pump bearings.
12. The outer race of the thrust bearing is too loose in the housing, resulting in too much end-play.
13. The inner race of the thrust bearing is not properly secured to the shaft.
14. The shaft diameter under the inner race of the bearing no longer conforms to Lawrence Pumps Flowserve's specifications.
15. The inside diameter of the bearing housing no longer conforms to Lawrence Pumps Flowserve's specifications.
16. Pipe stress is imposing excessive loads on the bearings.

11 DISASSEMBLY AND REASSEMBLY

The following information pertains to the disassembly and reassembly of Lawrence Pumps Flowserve HPX6000 pumps.

This information is intended to supplement the technical expertise of qualified and experienced personnel.

CAUTION ***Only qualified personnel shall disassemble and/or reassemble a HPX6000 pump.***

If qualified personnel are not available in the area in which the pump is located, Lawrence Pumps Flowserve can provide trained field service engineers to supervise these procedures and perform training seminars.

This information is not intended to replace or override the standard procedures of the pump's end-user, or the applicable safety codes of any governing body.

11.1 Disassembly instructions

Before beginning to disassemble a HPX6000 pump, be certain that relevant Cross Sectional and General Arrangement drawings are available. If these drawings are not available, contact the Service Department at Lawrence Pumps Flowserve.

⚠ ***Only adequate tools and equipment shall be used to disassemble and/or assemble a pump.***

All of the cylindrical joints on each HPX6000 pump are rabbet-fitted. Special care must be taken when disassembling and re-assembling pumps that have been operated in corrosive environments to ensure that the tolerances of the original fits can still be met.

All cylindrical fits must be cylindrical in reference to the shaft. At each stage in the disassembly and reassembly process, check to make certain that all rabbetted fits are concentric to the shaft, and that all mounting surfaces are perpendicular to the shaft. Refer to the Cross Sectional and General Arrangement drawings throughout the disassembly process.

When it becomes necessary to disassemble a HPX6000 pump for maintenance or inspection purposes, all of the perishable parts (bearings, gaskets, O-rings, and lip seals) shall be replaced. Discard the old parts. Use only new parts (e.g., bearings, mechanical seals) that have been supplied by manufacturers specified in the spare-parts list that was supplied with the pump.

CAUTION ***Do not substitute parts.***

CAUTION ***Do not install used parts.***

CAUTION ***Lawrence Pumps Flowserve assumes no responsibility or liability for damages caused by the use and failure of a HPX6000 pump in which non-authorized or used parts have been used. The use of unauthorized parts could lead to premature failures.***

⚠ ***The use of unauthorized parts could lead to product releases, and/or personal injuries.***

Clean pump surfaces thoroughly before re-assembling the pump. Areas that call for special attention include gasket surface areas, threads, and

O-ring grooves. In addition, all circular contact surfaces must be clean. Wash surfaces with solvent, and dry with compressed air or with clean, lint-free cloths.
When new parts require cleaning before installation, clean them thoroughly, following the manufacturers' instructions concerning the correct solvents and procedures.

CAUTION ***Proceed carefully when removing mechanical seals in order to avoid damage to the seal and its component parts. Also proceed carefully when removing the bearings and packing in order to avoid damaging the shaft or housing.***

When removing the impeller nut, be advised that the thread pattern of the shaft has been machined in the opposite direction as the direction of the shaft's rotation. Therefore, in order to remove the nut, the nut must be turned in the same direction as to the direction of the shaft's rotation.

11.2 Reassembly instructions

Refer to the Cross Sectional and General Arrangement drawings throughout the reassembly process.

CAUTION ***Apply torque values provided on the Cross Sectional Drawing.***

CAUTION ***Always check the original tolerances of the rabbetted fits before reassembly of the pump.***

Ensure that all fasteners are properly tightened See the assembly drawing for appropriate torque values.

When re-installing the pump on its base, follow the alignment procedures as if this were the initial installation. Special attention shall be paid to any changes in the base that may have resulted from cleaning and preparation work.

Proceed with the reassembly process carefully, using a step-by-step approach. The future performance of the pump will depend on the level of care that was taken with its reassembly.

11.3 Impeller clearance and adjustment

The impeller axial clearance adjustment is made by changing the thickness of the shim stock at the thrust bearing housing. Refer to the pump Cross Sectional and General Arrangement drawings for the location of these components.

To add or remove shim stock, the thrust bearing assembly can be moved axially by inserting two jackbolts into the threaded holes provided for this purpose. Remove the hold-down bolts, which fasten the bearing housing to the bearing frame.

The jackbolts can now be utilized to move the impeller away from the suction end of the pump. Two of the hold-down bolts can be utilized to move the impeller towards the suction end of the pump. While the impeller is being moved axially, the thrust bearing cover must be bolted to the thrust bearing housing with at least two of the bolts provided.

To determine the total impeller clearance, and adjust the impeller position, proceed as follows:

1. Loosen any slingers, mechanical seals, setscrews, etc., that may interfere with axial movement of the entire rotating assembly.
2. Move the entire rotating assembly away from the suction end of the pump. This is accomplished by turning the jackbolts clockwise.
3. Remove the shim stock.
4. Move the entire rotating assembly towards the suction end of the pump until the impeller strikes the casing. Please note that it may be possible to move the entire rotating assembly in both directions by hand.
5. Measure the gap between the thrust bearing flange and bearing frame with feeler gauges.
6. Move the entire rotating assembly back until the impeller strikes the driver side of the pump casing.
7. Once again, measure the gap between the thrust bearing housing flange and bearing frame with feeler gauges.
8. Subtract the gap in item 7 from the gap from item 5. The difference is the total impeller clearance.

9. Refer to Table 2 below for the Impeller Total Clearance on a new pump based on pump size. The total impeller clearances can vary by as much as plus or minus 15%. A dial indicator may also be utilized to check and set the impeller clearances.

10. The Front Clearance is CRITICAL to maintain pump discharge pressure. Set the front clearance to the percentage of Impeller Total Clearance of a New Pump (Table 2) by the ratio listed in following table based on Process Tamperature.

11. Back Clearance may vary due to wear over time. When overall performance or excess loads on bearings (usually if overall clearance is twice the original value) liners and/or impeller will need to be replaced. Another option to consider is described in the **NOTE** below.

12. When the impeller clearance is set, measure the gap between the thrust bearing housing flange and the bearing frame. This value is the proper size shim stock thickness required. Insert the required number of shim packs, and then insert and tighten down the hold-down bolts. Insert the remaining bolts to fasten the thrust bearing cover to the thrust bearing housing.

⚠ CAUTION ***NOTE:*** *If the total clearance is greater than 15%. The customer may install a full faced spacer between the casing cover liner and casing cover. This spacer needs to be made of material compatible with the process fluid. Verify that the liner does not cause interference between the casing cover bolting and the casing liner.*

After the pump has been reassembled, follow the start-up procedures described in the respective section above.

⚠ ***All protective guards must be secured in place before beginning the start-up procedure.***

Please direct any questions concerning the disassembly and reassembly of your HPX6000 pump to the Service Department at Lawrence Pumps Flowserve.

Process Temperature	Front Clearance (Percentage of Total of a New Pump)
> 250°F (120°C)	70%
< 250°F (120°C)	50%

12 SPARE PARTS

Most pumps that Lawrence Pumps Flowserve manufactures are produced on a made-to-order basis. Therefore, when planning to place an order for replacement parts, allow sufficient lead time when planning scheduled maintenance.

For information on the precise delivery time required for your parts, contact:

Service Department
Lawrence Pumps Flowserve
371 Market Street
Lawrence, MA 01843 USA

Tel. 978-682-5248
Fax. 978-975-4291
Email: service@lawrencepumps.com

When placing a parts order, be sure to include all relevant information with your order (pump model number and serial number), as well as the part numbers from the pump's Cross Sectional and/or General Arrangement drawings.

All rights reserved. No part of these instructions may be reproduced, stored in a retrieval system or transmitted in any form or by any means without prior permission of the Flowserve Pump Division or Lawrence Pumps Flowserve.

TABLE 2
IMPELLER CLEARANCE ON A NEW PUMP

Pump Designation	Total Impeller Clearance [inch]	Total Impeller Clearance [mm]
1.5 X 2 X 15	0.090	2.286
2 X 2 X 15	0.090	2.286
2 X 3 X 11	0.060	1.524
2 X 3 X 12	0.060	1.524
2 X 2 X 18	0.090	2.286
2 X 3 X 16	0.090	2.286
3 X 4 X 13	0.150	3.810
3 X 4 X 16	0.150	3.810
4 X 6 X 19	0.115	2.921
4 X 5 X 19	0.115	2.921
6 X 8 X 18	0.125	3.175
6 X 8 X 20	0.160	4.064
6 X 8 X 22	0.160	4.064

6 X 8 X 22.5	0.160	4.064
6 X 10 X 22	0.160	4.064
6 X 10 X 22.5	0.160	4.064
10 X 12 X 27	0.190	4.826
10 X 12 X 27.5	0.190	4.826
10 X 14 X 27	0.190	4.826
10 X 14 X 27.5	0.190	4.826
20 X 20 X 30	0.190	4.826

13 WARRANTY

Except as set forth in this section, all equipment sold by Lawrence Pumps Flowserve is warranted for a period of one (1) year from date of installation, not to exceed eighteen (18) months after date of shipment to the Purchaser, to be free from defects in material and workmanship disclosed under normal use and service. All repairs and rebuilds of equipment are warranted for one year from date of shipment. Only the scope of work specified in the purchase order for the repair or rebuild is covered under this warranty. If the Purchaser, within this period, notifies Lawrence Pumps Flowserve in writing, of any such claimed defects in any equipment, and if after appropriate tests and inspections by Lawrence Pumps Flowserve, the equipment is found not be in conformity with this warranty, Lawrence Pumps Flowserve will, at its option and expense, either repair the same or provide a replacement thereof, ex-works our plant in Lawrence, MA. If Lawrence Pumps Flowserve exercises its option to repair at installation site, it is understood that Lawrence Pumps Flowserve's personnel will have free access to the equipment and freedom to work on it. The foregoing warranty does not cover, and Lawrence Pumps Flowserve makes no warranty with respect to:

a) Failures not reported to Lawrence Pumps Flowserve within the warranty period specified above.

b) Failures or damage due to negligence, (other than that of Lawrence Pumps Flowserve) accident, abuse, improper installation, improper operation, decomposition by chemical action, or wear caused by the presence of abrasive materials.

c) Equipment which has been, in any way, repaired, dismantled or altered, except as authorized by a Representative of Lawrence Pumps Flowserve.

d) Equipment damaged in shipment or otherwise without the fault of Lawrence Pumps Flowserve.

e) Defects in articles purchased by Lawrence Pumps Flowserve and resold by it without alteration, which shall be repaired or replaced only in accordance with and to the extent of the original manufacturer's warranty.

This warranty is exclusive and in lieu of all other warranties, either expressed or implied or by trade usage in connection with the design, sale or use of any of its equipment. Lawrence Pumps Flowserve shall in no event, be liable for loss, damage, injury or expense resulting directly or indirectly from the failure of operation, faulty operation or breakdown of the equipment supplied hereunder or of any part, nor for special, remote or consequential damages of any nature nor in any event for any amount in excess of the cost of the repair to the defective part or replacement part.

ERECTION AND START-UP - Unless otherwise expressly stipulated, all equipment herein specified shall be erected and started-up by and at the expense of the Purchaser. Upon request of Purchaser and by separate agreement, Lawrence Pumps Flowserve will provide start-up engineers at standard rates to function as technical consultants and coordinators in connection with the installation and erection of the equipment herein specified. Such engineers will function only in an advisory capacity and shall have no responsibility for the supervision or the quality of workmanship of such installation, erection or start-up.

The Purchaser shall at its own expense, build the foundations and furnish all necessary labor, supplies and facilities required to erect and operate the equipment and to make all adjustments necessary for obtaining optimum performance.

Your Flowserve factory contacts:

Flowserve Lawrence Pumps
371 Market Street
Lawrence MA USA
01843

Telephone +1 (978) 682 5248
+1 (800) 434 5248
Fax +1 (978) 975 4291

FLOWSERVE REGIONAL SALES OFFICES:

USA and Canada
Flowserve Corporation
5215 North O'Connor Blvd.,
Suite 2300
Irving, Texas 75039-5421, USA
Telephone +1 972 443 6500
Fax +1 972 443 6800

Europe, Middle East, Africa
Flowserve FSG – Italy
Worthing S.r.l.
Via Rossini 90/92
20033 Desio (Milan), Italy
Telephone +39 0362 6121
Fax +39 0362 628 882

Latin America and Caribbean
Flowserve Corporation
6840 Wynnwood Lane
Houston, Texas 77008, USA
Telephone +1 713 803 4434
Fax +1 713 803 4497

Asia Pacific
Lawrence Pumps Asia PTE Ltd.
60 Kaki Bukit Place
#02-10 Eunos Tech Park, Singapore 415979
Telephone +65 6741 8060
Fax +65 6741 8061

Flowserve Pte. Ltd
10 Tuas Loop
Singapore 637345
Telephone +65 6771 0600
Fax +65 6862 2329

Local Flowserve factory representatives:

Flowserve Lawrence Pumps
Mike McHale
Customer Service Manager
371 Market Street
Lawrence MA USA
01843

Telephone +1 (978) 682 5248
+1 (800) 434 5248
Fax +1 (978) 975 4291
E-Mail mmchale@flowserve.com

SECTION 4:
PUMP PERFORMANCE CURVE

FORT HILLS

SK E&C

Vendor Data Document Review Coversheet

SAP No: 03-00114-FT-SE

Purchase Order No: 14037D-ME-PO-MF191-01

Purchase Order Title: API SLURRY PUMP

Vendor Name: FLOWSERVE LAWRENCE PUMPS

Fort Hills Document No: VP612-G-29021-1

Rev: 1D

Rev Date: 2014-10-27

Document Title: PUMP CURVES FOR 10X12X18 FLS HPX6000 HORIZONTAL FULL LINED SLURRY PUMP

Vendor Document No: PC612-A-G2102A **Rev:** 3

VDDRL Code: C-48

Equipment Tag No: 612G-2102A 612G-2102B 612G-2202A 612G-2202B 612G-2302A 612G-2302B

1. ■ Reviewed without comments. Work may proceed.
2. ☐ Reviewed with comments. Work shall proceed subject to incorporation of comments.
3. ☐ Do not proceed. Stop work on affected areas.
4. ☐ Review not required / for information only.
5. ☐ Final certified.

Permission to proceed does not constitute acceptance or approval of design details, calculations, analysis, test methods or material developed or selected by the supplier and does not relieve supplier from full compliance with contractual obligations.

BY: _____ DATE: 20 / 11 / 14

SKEC ENGINEER TO PRINT NAME AND SIGN (DD/MM/YY)

REV. (PROJECT)	ISSUE DATE	ISSUE PURPOSE	SUBMITTED BY (VENDOR)	CHECKED BY (VENDOR)	APPROVED BY (VENDOR)
1D	2014-10-27	For Review	LG	MP	RZ
1C	2014-09-15	For Review	LG	MP	RZ
1B	2014-07-10	For Review	LG	MP	RZ
1A	2014-06-12	For Review	LG	MP	RZ

LAWRENCE PUMPS
A Flowserve company

Customer:	SKEC	Cust. Ref:	PC612-A-G2102A
User:	FORT HILLS EN[illegible]GY LP	Item No:	612G-2102A/B,2202A/B,2302A/B
Pump Size:	10x12x18 In.	LPI Ref:	92720
Description:	API Horiz. Fully Lined Slurry - Enclosed Impeller		

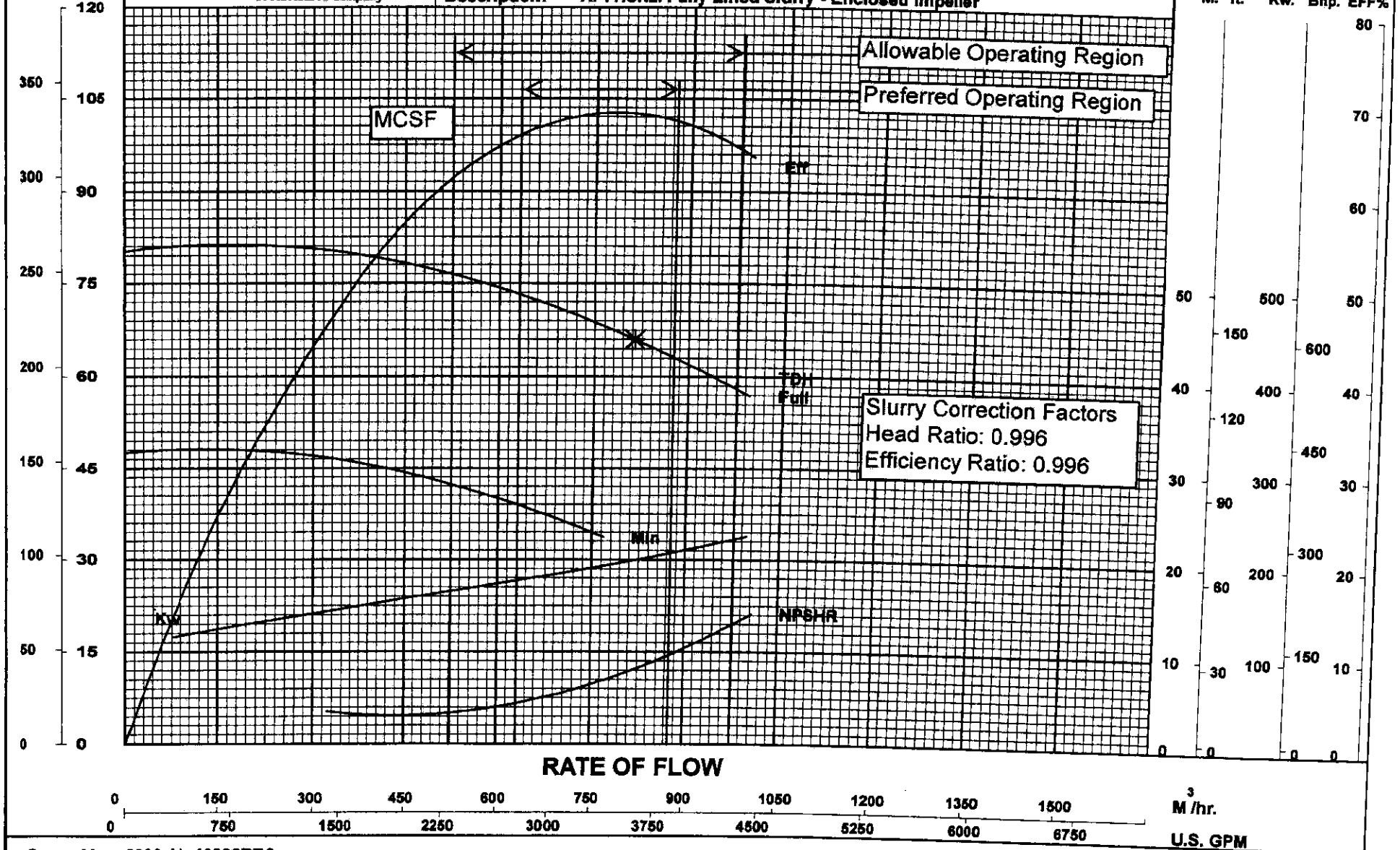

Curve No:	6006-AL-19398BR0								
Ref:	-	Service:	1st Stage Settler Underflow	NPSHA:	11.7 M.	Rated Flow:	814. Cu.M/hr	Impeller Dia.	
Characteristics based		Sp.gr.:	.94	Solids %:	20 by wt.	Rated Head:	66. M.	Rated:	470mm.
on slurry.		Visc.:	8 Cps	Solid Size:	.31 mm.	Rated Eff.:	69 %	Max:	470mm.
RPM:	1520	Temp.:	90 C.	Max Solid:	69.9 mm.	Rated Power:	199 Kw	Min:	381mm.

Rated Condition

LAWRENCE PUMPS
A Flowserve company

Customer:	SKEC	Doc. No.:	PC612-A-G2102A
User:	FORT HILLS EN Y LP	Item No:	612G-2102A/B,2202A/B,2302A/B
Pump Size:	10x12x18 in.	LPI Ref:	92720
Description:	API Horiz. Fully Lined Slurry - Enclosed Impeller		

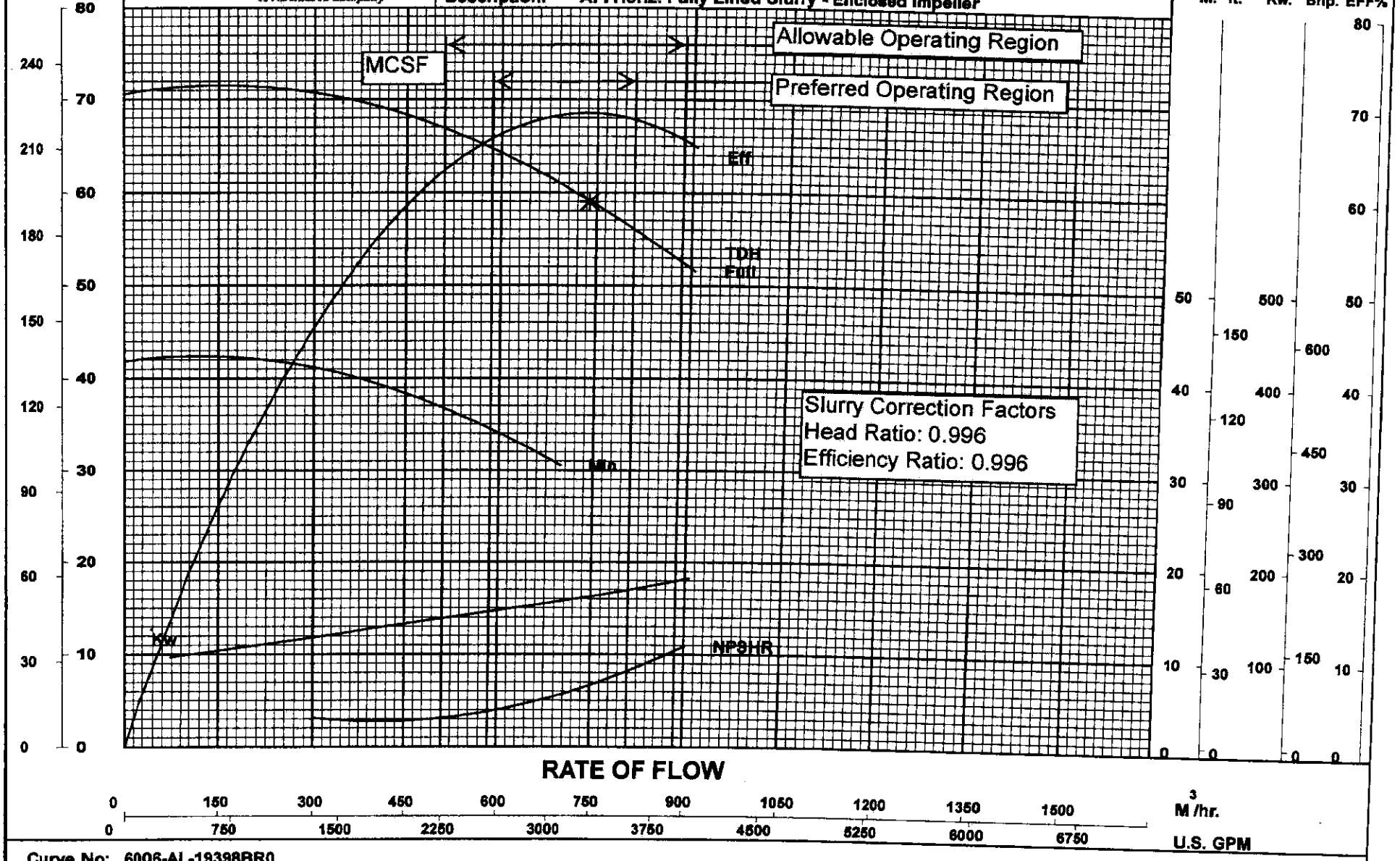

Curve No:	6006-AL-19398BR0								
Ref:	-	Service:	1st Stage Settler Underflow	NPSHA:	11.7 M.	Rated Flow:	740 Cu.M/hr	Impeller Dia.	
Characteristics based		Sp.gr.:	.94	Solids %:	20 by wt.	Rated Head:	59. M.	Rated:	470mm.
on water slurry.		Visc.:	8 Cps	Solid Size:	.31 mm.	Rated Eff.:	69 %	Max:	470mm.
RPM:	1427	Temp.:	90 C.	Max Solid:	69.9 mm.	Rated Power:	161 Kw	Min:	381mm.

Maximum / Normal Conditions

LAWRENCE PUMPS
A Flowserve company

Customer:	SKEC	Doc No.:	PC612-A-G2102A
User:	FORT HILLS EI)Y LP	Item No:	612G-2102A/B,2202A/B,2302A/B
Pump Size:	10x12x18 in.	LPI Ref:	92720
Description:	API Horiz. Fully Lined Slurry - Enclosed Impeller		

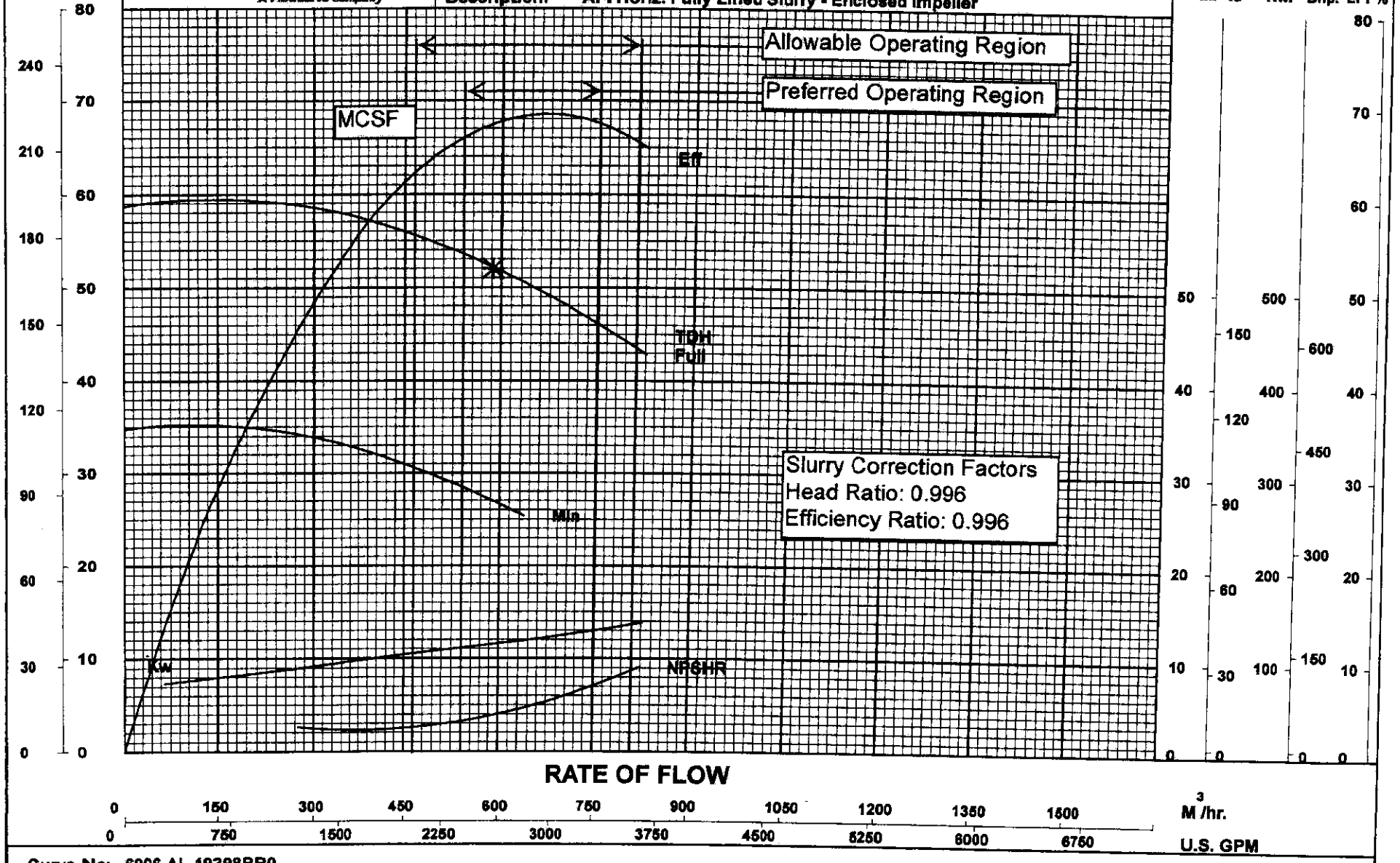

Curve No:	6006-AL-19398BR0								
Ref:	-	Service:	1st Stage Settler Underflow	NPSHA:	12.5 M.	Rated Flow:	588 Cu.M/hr	Impeller Dia.	
Characteristics based		Sp.gr.:	.94	Solids %:	20 by wt.	Rated Head:	52. M.	Rated:	470mm.
on slurry.		Visc.:	8 Cps	Solid Size:	.31 mm.	Rated Eff.:	68 %	Max:	470mm.
RPM:	1302	Temp.:	80 C.	Max Solid:	69.9 mm.	Rated Power:	115 Kw	Min:	381mm.

Minimum Condition

LAWRENCE PUMPS
A Flowserve company

Customer:	SKEC	Doc. No.:	PC612-A-G2102A
User:	FORT HILLS El)Y LP	Item No:	612G-2102A/B,2202A/B,2302A/B
Pump Size:	10x12x18 in.	LPI Ref:	92720
Description:	API Horiz. Fully Lined Slurry - Enclosed Impeller		

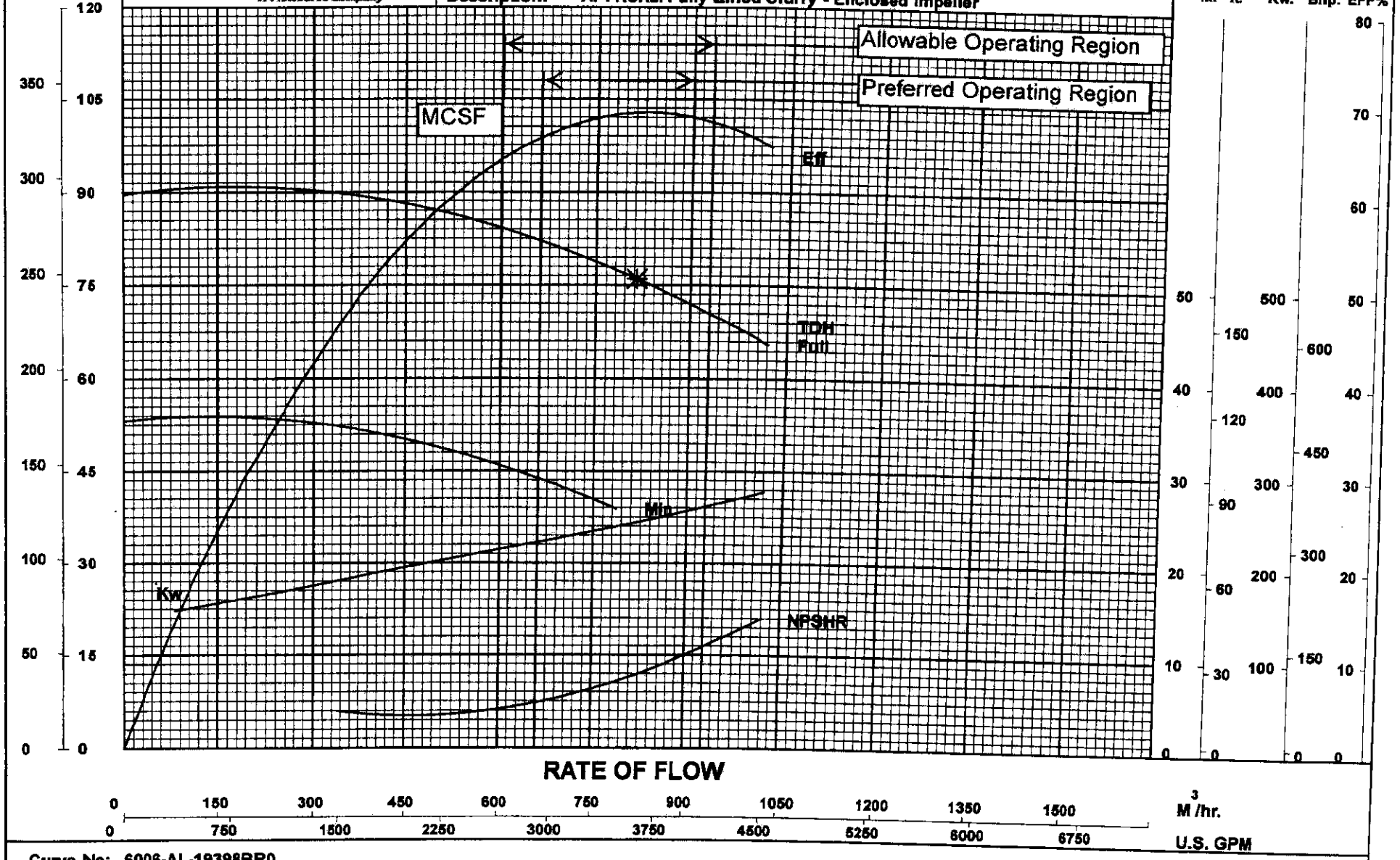

Curve No:	6006-AL-19398BR0								
Ref:	-	Service:	1st Stage Settler Underflow	NPSHA:	M.	Rated Flow:	814 Cu.M/hr	Impeller Dia.	
Characteristics based		Sp.gr.:	1	Solids %:	0 by wt.	Rated Head:	76. M.	Rated:	470mm.
on water at 68 f.		Visc.:	Cps	Solid Size:	0 mm.	Rated Eff.:	69 %	Max:	470mm.
RPM:	1595	Temp.:	C.	Max Solid:	69.9 mm.	Rated Power:	243 Kw	Min:	381mm.

Water Flush Out Condition

LAWRENCE PUMPS
A Flowserve company

Customer:	SKEC	Doc No.:	PC612-A-G2102A
User:	FORT HILLS EN[illegible]Y LP	Item No:	612G-2102A/B,2202A/B,2302A/B
Pump Size:	10x12x18 in.	LPI Ref:	92720
Description:	API Horiz. Fully Lined Slurry - Enclosed Impeller		

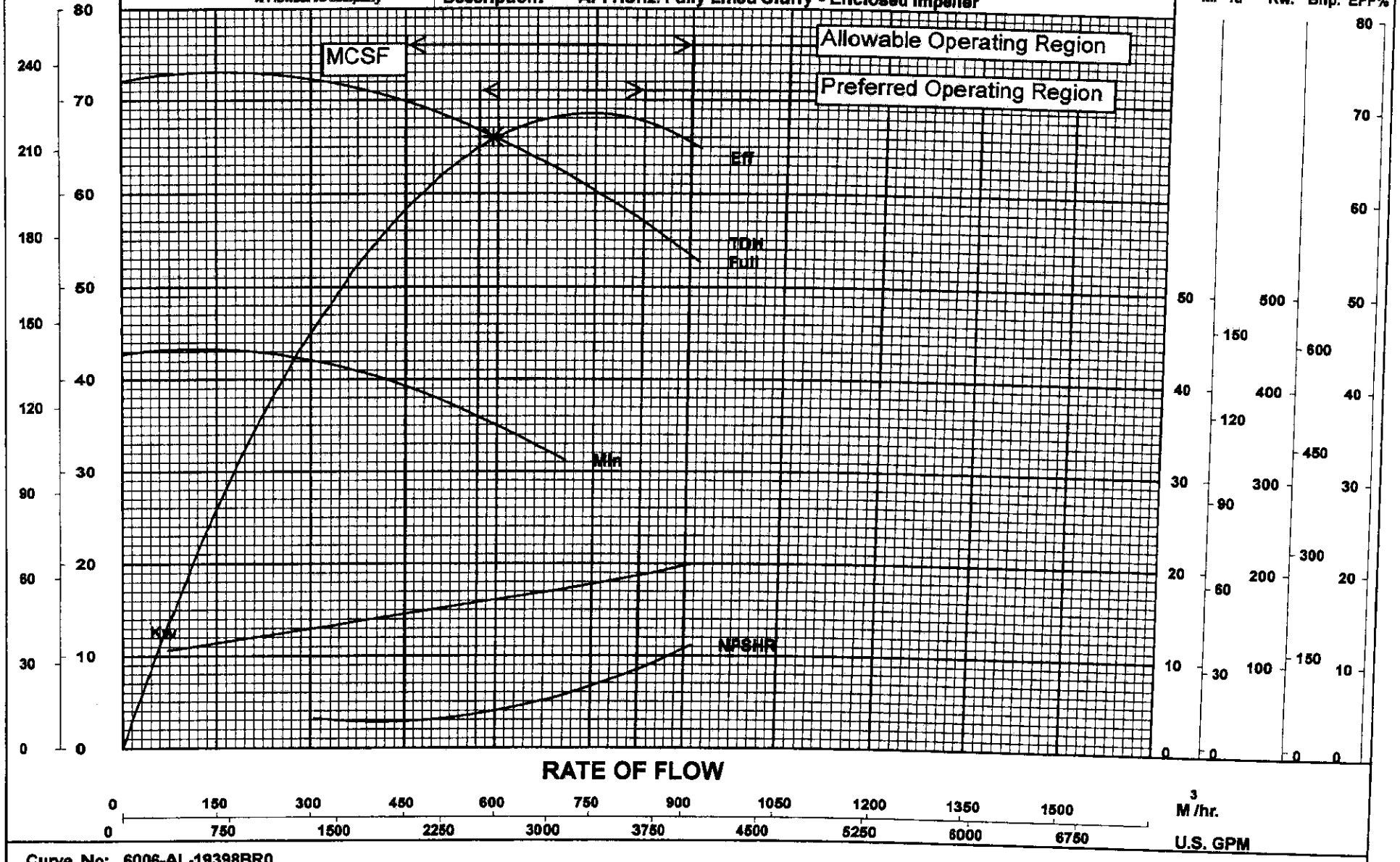

Curve No:	6006-AL-19398BR0								
Ref:	-	Service:	1st Stage Settler Underflow	NPSHA:	M.	Rated Flow:	592 Cu.M/hr	Impeller Dia.	
Characteristics based		Sp.gr.:	1	Solids %:	0 by wt.	Rated Head:	66. M.	Rated:	470mm.
on water at 68 f.		Visc.:	Cps	Solid Size:	0 mm.	Rated Eff.:	66 %	Max:	470mm.
RPM:	1430	Temp.:	C.	Max Solid:	69.9 mm.	Rated Power:	160 Kw	Min:	381mm.

Pump Out Condition

SECTION 5:
DIMENSIONAL OUTLINE (G.A.) DRAWING AND LIST OF COMPONENTS

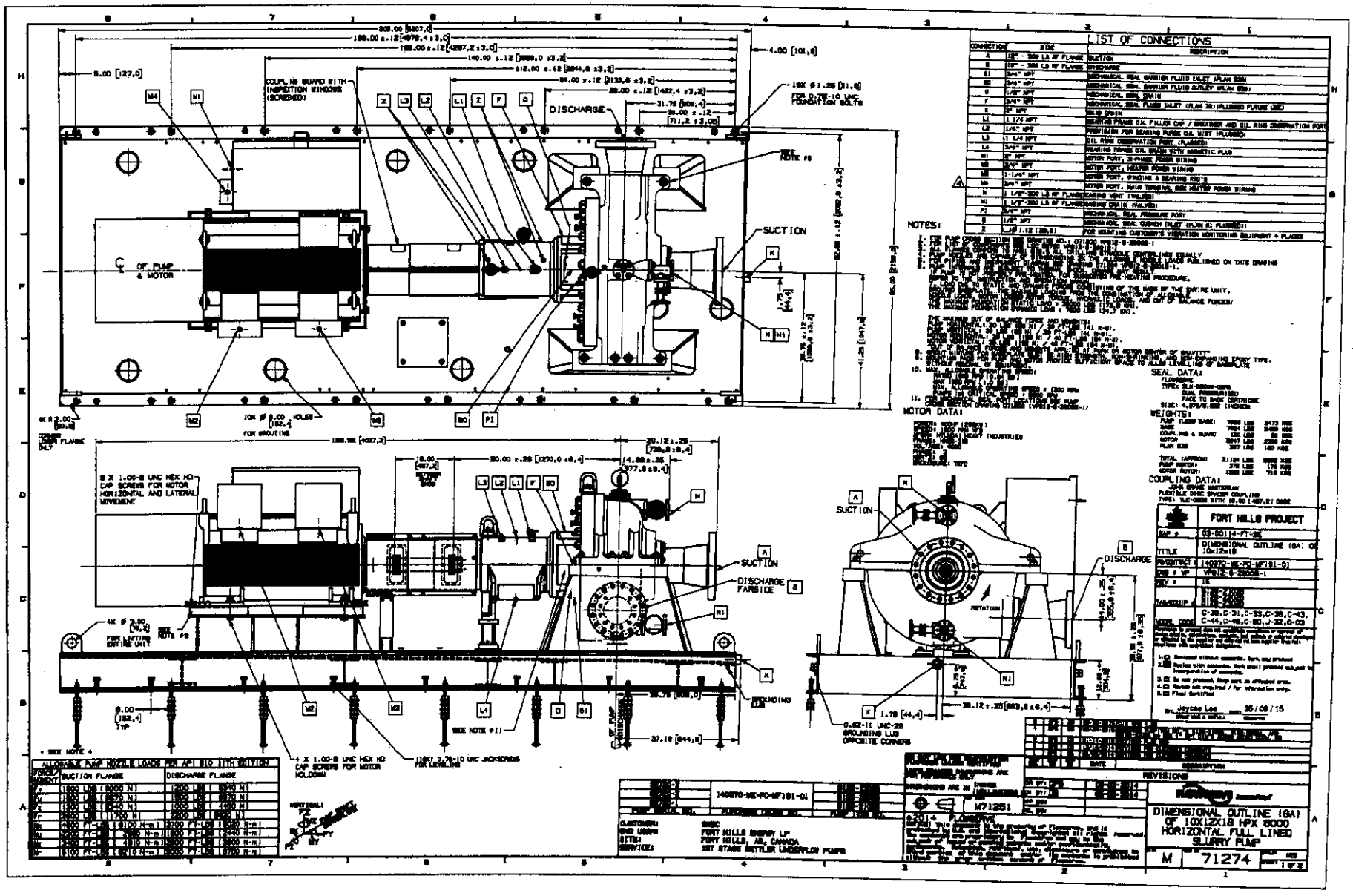
LIST OF CONNECTIONS
NOTES:
SEAL DATA:
WEIGHTS:
MOTOR DATA:
COUPLING DATA:
FORT HILLS PROJECT
DIMENSIONAL OUTLINE (GA) OF 10X12X18 HPX 5000 HORIZONTAL FULL LINED SLURRY PUMP
M 71274
SUCTION
DISCHARGE
DISCHARGE FARSIDE
COUPLING GUARD WITH INSPECTION WINDOWS (SCREENED)
FOR GROUTING
FOR LIFTING ENTIRE UNIT
GROUNDING LUG
ALLOWABLE PUMP NOZZLE LOADS PER API 610 11TH EDITION
FORT HILLS ENERGY LP
FORT HILLS, AB, CANADA
SET STAGE SETTLER UNDERFLOW PUMPS

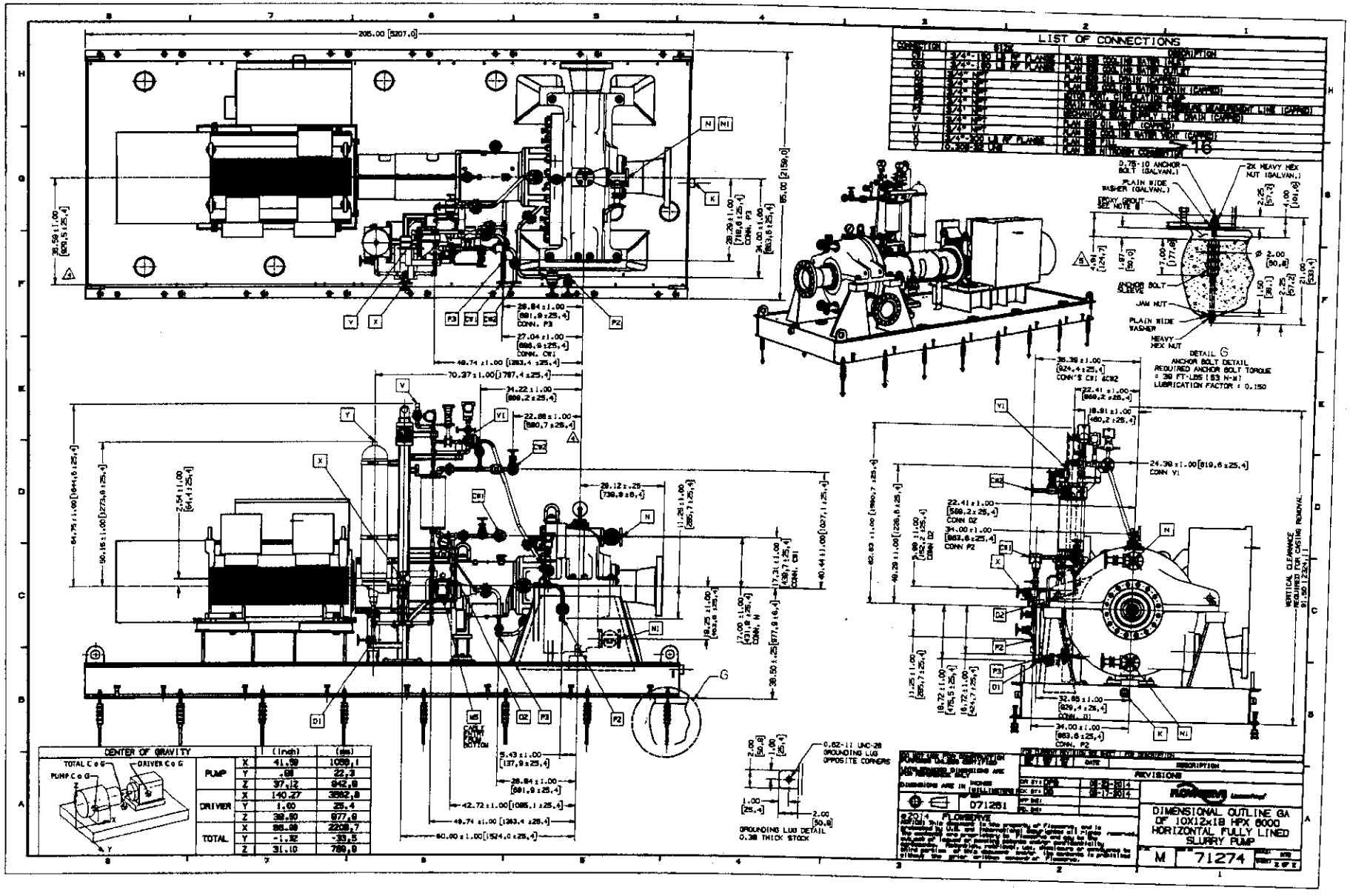
LIST OF CONNECTIONS
CONNECTION
SIZE
DESCRIPTION
DIMENSIONAL OUTLINE GA OF 10X12X18 HPX 6000 HORIZONTAL FULLY LINED SLURRY PUMP
M
71274
CENTER OF GRAVITY
PUMP
DRIVER
TOTAL
(inch)
(mm)
GROUNDING LUG DETAIL 0.38 THICK STOCK
DETAIL G
ANCHOR BOLT DETAIL
REQUIRED ANCHOR BOLT TORQUE = 30 FT-LBS (83 N-M)
LUBRICATION FACTOR = 0.150
VERTICAL CLEARANCE REQUIRED FOR CASING REMOVAL
071251
REVISIONS
DESCRIPTION
DIMENSIONS ARE IN INCHES [MILLIMETERS]
©2014 FLOWSERVE

FORT HILLS

SK E&C

Vendor Data Document Review Coversheet

SAP No: 03-00114-FT-SE

Purchase Order No: 14037D-ME-PO-MF191-01

Purchase Order Title: API SLURRY PUMP

Vendor Name: FLOWSERVE LAWRENCE PUMPS

Fort Hills Document No: VP612-G-29012-1

Rev: 1D

Rev Date: 2015-08-11

Document Title: LIST OF COMPONENT FOR 10X12X18 FLS HPX6000 HORIZONTAL FULL LINED SLURRY PUMP CONNECTED TO A 400 HP MOTOR

Vendor Document No: LOC92720-1

Rev: 3

VDDRL Code: A4-01

Equipment Tag No: 612G-2102B 612G-2202B 612G-2302B

1. ■ Reviewed without comments. Work may proceed.
2. ☐ Reviewed with comments. Work shall proceed subject to incorporation of comments.
3. ☐ Do not proceed. Stop work on affected areas.
4. ☐ Review not required / for information only.
5. ☐ Final certified.

If pump selection is revised, this document also is required to be revised accordingly.

Permission to proceed does not constitute acceptance or approval of design details, calculations, analysis, test methods or material developed or selected by the supplier and does not relieve supplier from full compliance with contractual obligations.

BY: Jeycee Lee
SKEC ENGINEER TO PRINT NAME AND SIGN

DATE: 03 / 09 / 15
(DD/MM/YY)

REV.	ISSUE DATE	ISSUE PURPOSE	SUBMITTED BY	CHECKED BY	APPROVED BY
1D	2015-08-11	For Review	LG	MP	RZ
1C	2014-04-27	For Review	LG	MP	RZ
1B	2014-01-28	For Review	LG	MP	RZ
1A	2014-06-18	For Review	LG	MP	RZ

FORTHILLS

SK E&C

(PROJECT)			(VENDOR)	(VENDOR)	(VENDOR)

LIST OF COMPONENTS

FLOWSERVE

Lawrence Pumps

DATE 04/21/14
LOC 92720

QUANTITY: THREE (3) UNITS
DESCRIPTION:
10 x 12 x 18 FLS - HPX 6000 FULLY LINED HORIZONTAL SLURRY PUMP CONNECTED TO A 400 HP MOTOR

DIMENSIONAL OUTLINE (GA): M71274
CROSS SECTIONAL DWG: D71200
PUMP PARTS LIST NO.: PL71200

PUMP ITEM NO.S: 612G-2102B
612G-2202B
612G-2302B

CERTIFIED CORRECT FOR	
CUSTOMER: SKEC	
FORT HILLS, AB, CANADA	
CUST.'S ORDER NO.	14037D-ME-PO-MF-191-01
L.P.I. ORDER NO.	92720
CERTIFIED BY	
DATE	

HEAD: 217 FT (66M) **CAPACITY:** 3584 gpm (814 m³/hr) **SPEED:** 1520 RPM **ROTATION:** CW VIEWED FROM COUPLING END

RSP	PART NO.	QTY PER UNIT	PART NAME	MATERIALS TYPE	MATERIALS ASTM	ITEM NO.	REMARKS
		1	PUMP	10x12x18 SERIES 6000 FULLY LINED HORIZONTAL PUMP		MP01-06-SH92720	
		1	BASE	STEEL	A36, A516 Gr 70N	038-71310-000	
		8	MOTOR JACKSCREW SUPPORT	304 SS	N/A	259-4683303-00	
		1	SPACER COUPLING	JOHN CRANE METASTREAM	N/A	305-03-00443	
		1	COUPLING GUARD	ALUMINUM/ STEEL	N/A	249-71226-000	
		1	COUPLING GUARD BRACKET	ALUMINUM	N/A	259-71814-000	
		1	ELECTRIC MOTOR 400 HP, 1800RPM, 3 PH, 60 HZ, 4000 V, ENCLOSURE: TEFC, HORIZONTAL FOOT MOUNTED, FRAME NO.: HNE6-318-4	HYUNDAI HEAVY INDUSTRIES	N/A	262-30-00004	
		1	LOCATING PIN	ST STEEL	N/A	311-71688-000	
		1	SEAL SUPPORT SYSTEM (PLAN 53B), WATER COOLED	316SS/STEEL	FLOWSERVE	232-015-00179	
		1	SEAL OIL INTERCONNECTING PIPING (PLAN 53B)	316SS/STEEL	A312,A182,STEEL	232-015-71225	

RSP: RECOMMENDED SPARE PARTS
(ORDER PARTS PER L.P.I. ORDER NO AND ITEM NO.)

LIST OF COMPONENTS

LOC 92720

RSP	PART NO.	QTY PER UNIT	PART NAME	MATERIALS TYPE	MATERIALS ASTM	ITEM NO.	REMARKS
		16	ANCHOR BOLT KIT	STEEL	A307 Gr A, A563 Gr A, F436	315-71274-00	
		2	GATE VALVE	VOGT	A350 LF2	232-008-00549	VGA0310#12
		1	COOLING WATER PIPING FOR PLAN 53B	STEEL	A106, A105N	232-015-72131	
		1	SEAL CHAMBER PRESSURE MONITOR PIPING	316 SS, STEEL	A312, A182, STEEL	232-015-71334	
			CONSISTING OF:				
		1	PRESSURE TRANSMITTER	ROSEMOUNT	N/A	232-019-00797	
		1	ISOLATION GATE VALVE (FOR TRANSMITTER)	VOGT	A182	232-008-00170A	VGA0028#12-SW/TH
		1	BLOCK/BLEED VALVE (FOR TRANSMITTER)	SWAGELOK / 316 SST	N/A	232-008-00533	
		1	DRAIN VALVE	VOGT	A182	232-008-00019I	VGA0028#12-SW
		1	MOTOR SHIM KIT	ST STL	N/A	307-00008-000	
		1	AUXILIARY FASTENER KIT	STEEL	N/A	258-2X-71274	
		1	SHIPPING COVER KIT	STEEL	N/A	258-5X-92720	
		2	SHIM, MOTOR FRONT	ST STEEL	N/A	307-71495-000	
		2	SHIM, MOTOR REAR	ST STEEL	N/A	307-71741-000	

RSP: RECOMMENDED SPARE PARTS
(ORDER PARTS PER L.P.I. ORDER NO AND ITEM NO.)

LIST OF COMPONENTS

LOC 92720

REVISIONS

NO.	BY	DATE	CHECKED BY	ENGINEERING APPROVAL	DESCRIPTION
0	DPB	04/28/14	DB	RZ	FIRST ISSUE
1	DPB	11/11/14	DB		COUPLING GUARD BRACKET ITEM NO. WAS 259-70674-000 ADDED MOTOR ITEM NO. LOCATING PIN ITEM NO WAS 311-71235-000 ADDED MOTOR SHIMS ITEM NO. 307-71495-000 & 307-71741-000
2	RZ	04-27-2015	RZ	RZ	ADDED REMAINING SN'S. ADDED VALVE TAG NUMBERS. ADDED DETAILS TO SEAL CHAMBER PRESSURE MONITOR PIPING. REVISED SEAL SUPPORT SYSTEM PART NUMBER. REVISED COOLING WATER PIPING PART NUMBER.
3	RZ	08-11-15	RZ	RZ	DELETED PUMP TAGS 612G-2102A, 612G-2202A, 612G-2302A.

SECTION 6:
CROSS SECTIONAL DRAWING AND PUMP PARTS LIST

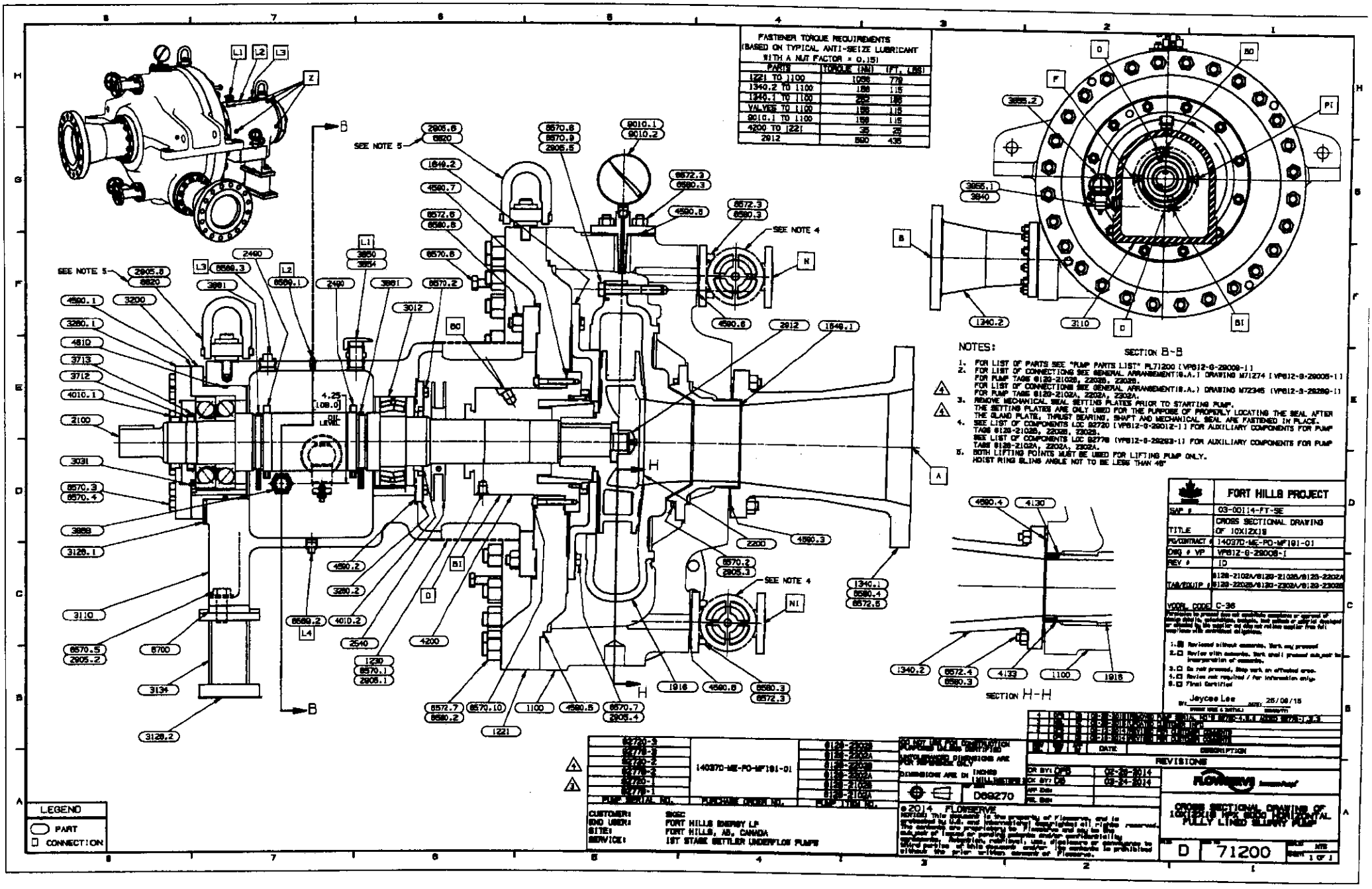
FASTENER TORQUE REQUIREMENTS
(BASED ON TYPICAL, ANTI-SEIZE LUBRICANT WITH A NUT FACTOR = 0.15)
PARTS | TORQUE (Nm) | (FT. LBS)
1221 TO 1100 | 1056 | 779
1340.2 TO 1100 | 156 | 115
1340.1 TO 1100 | 252 | 186
VALVES TO 1100 | 156 | 115
9010.1 TO 1100 | 156 | 115
4200 TO 1221 | 35 | 25
2912 | 590 | 435
SEE NOTE 5
SEE NOTE 4
SECTION B-B
SECTION H-H
OIL LEVEL
NOTES:
1. FOR LIST OF PARTS SEE "PUMP PARTS LIST" PL71200 (VP812-0-29009-1)
2. FOR LIST OF CONNECTIONS SEE GENERAL ARRANGEMENT(S.A.) DRAWING M71274 (VP812-0-29005-1)
FOR PUMP TAGS 6120-2102B, 2202B, 2302B.
FOR LIST OF CONNECTIONS SEE GENERAL ARRANGEMENT(S.A.) DRAWING M72345 (VP812-0-29289-1)
FOR PUMP TAGS 6120-2102A, 2202A, 2302A.
3. REMOVE MECHANICAL SEAL SETTING PLATES PRIOR TO STARTING PUMP.
THE SETTING PLATES ARE ONLY USED FOR THE PURPOSE OF PROPERLY LOCATING THE SEAL AFTER THE GLAND PLATE, THRUST BEARING, SHAFT AND MECHANICAL SEAL ARE FASTENED IN PLACE.
4. SEE LIST OF COMPONENTS LOC 82720 (VP812-0-29012-1) FOR AUXILIARY COMPONENTS FOR PUMP TAGS 6120-2102B, 2202B, 2302B.
SEE LIST OF COMPONENTS LOC 82778 (VP812-0-29283-1) FOR AUXILIARY COMPONENTS FOR PUMP TAGS 6120-2102A, 2202A, 2302A.
5. BOTH LIFTING POINTS MUST BE USED FOR LIFTING PUMP ONLY.
HOIST RING SLING ANGLE NOT TO BE LESS THAN 45°
FORT HILLS PROJECT
SAP # 03-00114-FT-SE
TITLE CROSS SECTIONAL DRAWING OF 10X12X18
PO/CONTRACT # 140370-ME-PO-MF181-01
DWG # VP VP812-0-29008-1
REV # 10
TAG/EQUIP # 6120-2102A/6120-2102B/6120-2202A/6120-2202B/6120-2302A/6120-2302B
VOOR, CODE C-36
REVISIONS
DATE
DESCRIPTION
LEGEND
PART
CONNECTION
140370-ME-PO-MF181-01
PUMP SERIAL NO.
PURCHASE ORDER NO.
PUMP TYPE NO.
CUSTOMER: SNC
END USER: FORT HILLS ENERGY LP
SITE: FORT HILLS, AB, CANADA
SERVICE: 1ST STAGE SETTLER UNDERFLOW PUMPS
DO NOT USE FOR CONSTRUCTION
DIMENSIONS ARE IN INCHES
D69270
©2014 FLOWSERVE
CROSS SECTIONAL DRAWING OF 10X12X18 HPS SERO HORIZONTAL FULLY LINED SLURRY PUMP
D
71200
SHEET 1 OF 1

FORT HILLS

SK E&C

Vendor Data Document Review Coversheet

SAP No: 03-00114-FT-SE

Purchase Order No: 14037D-ME-PO-MF191-01

Purchase Order Title: API SLURRY PUMP

Vendor Name: FLOWSERVE LAWRENCE PUMPS

Fort Hills Document No: VP612-G-29009-1

Rev: 1D **Rev Date:** 2015-08-11

Document Title: PUMP PARTS LIST OF 10X12X18 FLS HPX6000 HORIZONTAL FULL LINED SLURRY PUMP

Vendor Document No: PL71200-2102A **Rev:** 3

VDDRL Code: A4-01

Equipment Tag No: 612G-2102A 612G-2102B 612G-2202A 612G-2202B 612G-2302A 612G-2302B

1. ■ Reviewed without comments. Work may proceed.
2. ☐ Reviewed with comments. Work shall proceed subject to incorporation of comments.
3. ☐ Do not proceed. Stop work on affected areas.
4. ☐ Review not required / for information only.
5. ☐ Final certified.

If pump selection is revised, this document also is required to be revised accordingly.

Permission to proceed does not constitute acceptance or approval of design details, calculations, analysis, test methods or material developed or selected by the supplier and does not relieve supplier from full compliance with contractual obligations.

BY: Jeycee Lee
SKEC ENGINEER TO PRINT NAME AND SIGN

DATE: 03 / 09 / 15
(DD/MM/YY)

1D	2015-08-11	For Review	LG	MP	RZ
1C	2015-03-10	For Review	LG	MP	RZ
1B	2015-01-20	For Review	LG	MP	RZ
1A	2014-06-17	For Review	LG	MP	RZ

FORT HILLS

SK E&C

REV. (PROJECT)	ISSUE DATE	ISSUE PURPOSE	SUBMITTED BY (VENDOR)	CHECKED BY (VENDOR)	APPROVED BY (VENDOR)

PUMP PARTS LIST

FLOWSERVE

Lawrence Pumps

DATE 04-21-14
PL 71200

DESCRIPTION: 10x12x18 FLS – HPX 6000
FULLY LINED HORIZONTAL SLURRY PUMP
CROSS SECTION D71200

PUMP ITEM NO.S: 612G-2102A 612G-2102B
612G-2202A 612G-2202B
612G-2302A 612G-2302B

CERTIFIED CORRECT FOR

CUSTOMER: SKEC

FORT HILLS, AB, CANADA

CUST.'S ORDER NO. 14037D-ME-PO-MF191-01

FLP ORDER NO. 92720, 92778

CERTIFIED BY

DATE

RSP	PART NO.	QTY PER UNIT	PART NAME	MATERIALS TYPE	MATERIALS ASTM	ITEM NO.	REMARKS
	1100	1	CASING	STEEL	A216-WCB	023-71203-000	
	1221	1	COVER CASING (HUB DISC)	STEEL	A216-WCB	017-71220-000	
	1230	4	HAND HOLE COVER	STEEL	A-36	042-7810-N000	
	1340.1	1	ADAPTER (SUCTION ADAPTER SPOOL)	STEEL	A216-WCB	041-71352-000	
	1340.2	1	ADAPTER (DISCHARGE ADAPTER SPOOL)	STEEL	A216-WCB	500-71290-000	
X	1649.1	1	LINER (SUCTION NOZZLE LINER)	HC 250	A532 CLIIIA	048-43185-004	ANNEALED
X	1649.2	1	LINER (CASING COVER)	HC 250	A532 CLIIIA	048-71246-000	ANNEALED
X	1916	1	CASING LINER	HC 250	A532 CLIIIA	048-71281-000	ANNEALED
X	2100	1	SHAFT	410 SS	A276, A193	001-71230-000	
X	2200	1	IMPELLER	HC 250	A532 CLIIIA	060-71081-001	ANNEALED
	2490	2	COLLAR	BRONZE	B505	106-50049-000	
	2540	1	FLINGER	ALUMINUM	N/A	082-63965-003	
X	2912	1	IMPELLER NUT	410 SS	A276	254-4277504-09	
X	3012	1	RADIAL ROLLER BEARING	SKF INDUSTRIES	#22226 E/C3	002-0107	
X	3031	2	THRUST BEARING	SKF INDUSTRIES	7322 BECBM	002-0200	
	3200	1	BEARING HOUSING	STEEL	A36	034-34083-000	
	3110	1	FRAME	STEEL	A216 WCB	018-71227-000	
	3134	1	SUPPORT FOOT	STEEL	A36/500	259-71353-000	
	3260.1	1	BEARING COVER (THRUST)	STEEL	A36	035-47915-000	
	3260.2	1	BEARING COVER (RADIAL)	STEEL	A36	035-47916-000	
X	3712	1	BEARING LOCK NUT	STEEL	N/A	900-01-22	
X	3713	1	BEARING NUT WASHER	STEEL	N/A	800-01-22	
X	4010.1	1	SHAFT SEAL	INPRO INC BRONZE/VITON	N/A	007-05-0086	VBXX-D
X	4010.2	1	SHAFT SEAL	INPRO INC BORNZE/VITON	N/A	007-05-0087	VBXX-D
	4133	1	PACKING SEATING RING	316 SS	A240	41-06940631W-N	
X	4200	1	MECHANICAL SEAL	FLOWSERVE	N/A	257-01-00348	D0215044

RSP: RECOMMENDED SPARE PARTS
(ORDER PARTS PER FLP ORDER NO AND ITEM NO.)

PUMP PARTS LIST

PL 71200

RSP	PART NO.	QTY PER UNIT	PART NAME	MATERIALS TYPE	MATERIALS ASTM	ITEM NO.	REMARKS
	3126.1	1	SHIM	STEEL	N/A		0.38 [9,7] ALLOWED
	3126.2	1	SHIM	ST. STL.	N/A		0.12 [3,0] ALLOWED
	3840	1	LUBRICATING LINE	STEEL	A53	237-0840200-00	
	3850	1	OIL FILTER	TEDECO P/N: MF965 STEEL	N/A	232-001-00000	
	3854	1	OIL FILLER PLUG	TEDECO PN:MF9380-2VM ALUMINUM/STEEL	N/A	232-000-00003	
	3855.1	1	CONSTANT LEVEL OILER	TRICO P/N:30003, 4 OZ ZINC/STEEL	N/A	232-002-00004	
	3855.2	1	CONSTANT LEVEL OILER (GUARD)	TRICO P/N:30013 STEEL	N/A	232-002-00005	
	3858	1	OIL LEVEL SIGHT GLASS	TEDECO P/N:M147C STEEL/GLASS	N/A	232-007-00003	
	3861	2	OIL RING	BRONZE	B-505-C93200	273-48880-000	
X	4130	3	STUFFING BOX PACKING	GARLOCK 98		235-380625-009	
X	4610	1	"O" RING	BUNA-N	N/A	231-2451-02	
	9010.1	1	TEMPERATURE MEASURING INSTRUMENT THERMOWELL	WIKA Model TW-10	A182 – 316/316L	232-011-00347	
	9010.2	1	TEMPERATURE MEASURING INSTRUMENT THERMOMETER	WIKA Model TI.52	N/A	232-018-00171	
			GASKET KIT			320-M-71200	
X	4590.1	1	GASKET	Garlock 3000		252-109502-300	
X	4590.2	1	GASKET	Garlock 3000		252-109122-500	
X	4590.3	1	GASKET	FLEXICARB / 316L		252-20057-035	
X	4590.4	1	GASKET	FLEXICARB / 316L		252-20000-035	
X	4590.5	1	GASKET	FLEXICARB / 316L		252-50031-035	
X	4590.6	3	GASKET	FLEXICARB / 316L		252-20069-035	
X	4590.7	1	GASKET	FLEXICARB / 316L		252-50093-035	

RSP: RECOMMENDED SPARE PARTS
(ORDER PARTS PER FLP ORDER NO AND ITEM NO.)

PUMP PARTS LIST

PL 71200

RSP	PART NO.	QTY PER UNIT	PART NAME	MATERIALS TYPE	MATERIALS ASTM	ITEM NO.	REMARKS
		1	PRIMARY FASTENER KIT			258-1X-71200	
	2905.1	8	WASHER, WIDE PLAIN 0.38	STEEL	N/A	233-0013-12	
	2905.2	2	WASHER, WIDE PLAIN 1.00	STEEL	N/A	233-0027-12	
	2905.3	6	WASHER W/LONG TAB FOR 16MM SCREW	STEEL	N/A	271-99-0133	
	2905.4	8	WASHER W/LONG TAB FOR 20MM SCREW	STEEL	N/A	271-99-0165	
	2905.5	8	WASHER W/LONG TAB FOR 22MM SCREW	STEEL	N/A	271-99-0194	
	2905.6	2	WASHER, WIDE ZINC PLATED 1.00	STEEL	A-563 GR. A4	233-0027-53	
	6569.1	1	PLUG, PIPE SQ. HEAD 0.25" NPT	STEEL	A-105	245-0100338-02	
	6569.2	1	PLUG, PIPE SQ. HEAD 0.75" NPT	STEEL	A-105	271-99-0141	MAGNETIC
	6569.3	1	PLUG, PIPE SQ. HEAD 1.25" NPT	STEEL	A-105	245-0102838-02	
	6570.1	8	SCREW,HH 0.38-16X0.75 LG	STEEL	N/A	005-0025075-12	
	6570.2	14	SCREW, HH 0.62-11X1.75 LG	STEEL	N/A	005-0029175-12	
	6570.3	4	SCREW, HH 0.88-9X2.75 LG	4140	A-193 GR. B7	005-0032275-55	
	6570.4	8	SCREW, HH 0.88-9X4.50 LG	4140	A-193 GR. B7	005-0032450-55	
	6570.5	2	SCREW, HHFT 1.00-8X2.75 LG	STEEL	N/A	005-0133275-12	
	6570.6	4	SCREW, HHFT 0.88-9X6.75 LG	STEEL	N/A	005-0132675-12	
	6570.7	8	SCREW, HH 0.75-10X2.25 LG	STEEL	N/A	005-0031225-12	
	6570.8	6	SCREW,HH 0.88-9X5.50 LG	STEEL	N/A	005-0032550-12	
	6570.9	2	SCREW,HH 0.88-9X6.75 LG	STEEL	N/A	005-0032675-12	
	6570.10	8	SCREW, SH 0.50-13X3.50 LG	316	A-193 GR. B8M	005-0227350-75	
	6572.3	12	STUD, CT 0.75-10 X 3.25"LG	4140	A-193 GR. B7	313-31-0325-55	
	6572.4	12	STUD, CT 0.75-10 X 4.25"LG	4140	A-193 GR. B7	313-31-0425-55	
	6572.5	12	STUD, CT 0.88-9 X 4.50"LG	4140	A-193 GR. B7	313-32-0450-55	
	6572.6	12	STUD, CT 1.00-8 X 4.75"LG	STEEL	N/A	313-33-0475-12	
	6572.7	28	STUD, CT 1.38-8 X 8.00"LG	4140	A-193 GR. B7	313-56-0800-55	
	6580.2	28	NUT, HEAVY HEX 1.38-8	STEEL	A-194 GR. 2H	230-0256-56	
	6580.3	24	NUT, HEAVY HEX 0.75-10	STEEL	A-194 GR. 2H	230-0231-56	
	6580.4	12	NUT, HEAVY HEX 0.88-9	STEEL	A-194 GR. 2H	230-0232-56	
	6580.6	12	NUT, HEAVY HEX 1.00-8	STEEL	A-194 GR. 2H	230-0233-56	
	6700	1	KEY, 0.75 X 0.75 X 4.00	316	N/A	241-16-400-001	
	6820	2	SWIVEL HOIST RING M24-3	NICKEL COATED ALLOY STEEL	N/A	271-99-0384	LOAD: 4200 KG

RSP: RECOMMENDED SPARE PARTS
(ORDER PARTS PER FLP ORDER NO AND ITEM NO.)

PUMP PARTS LIST

PL 71200

REVISIONS

NO.	BY	DATE	CHECKED BY	ENGINEERING APPROVAL	DESCRIPTION
0	DPB	04/21/14	DPB		FIRST ISSUE
1	DPB	11/18/14	DPB	RJZ	REVISED SUFFIX TO PART NO'S 1649.1,2200, 4200 4610, 9010.1, AND 9010.2. ADDED FASTENER KIT.
2	RJZ	02/23/15	RJZ	RJZ	ADDED TAGS 612G-2102B, 2202A/B, 2302A/B.
3	RJZ	08-11-15	RJZ	RJZ	ADDED SN 92778.

SECTION 7:
SEAL

D0215044 1 (Both) Rev: E KAL Eng Marks, Tracy (10141847) Jul-16-2015 14:51:58

D0215044 E

[F]	FLUSH (PLUGGED)	3/4 NPT
[PI]	PRESSURE INDICATOR (TRANSMITTER)	3/4 NPT
[BI]	BARRIER IN	3/4 NPT
[BO]	BARRIER OUT	3/4 NPT
[Q]	QUENCH (PLUGGED)	1/2 NPT
[D]	DRAIN	1/2 NPT
[SSA]	SET SCREW ACCESS (PLUGGED)	5/8 NPT

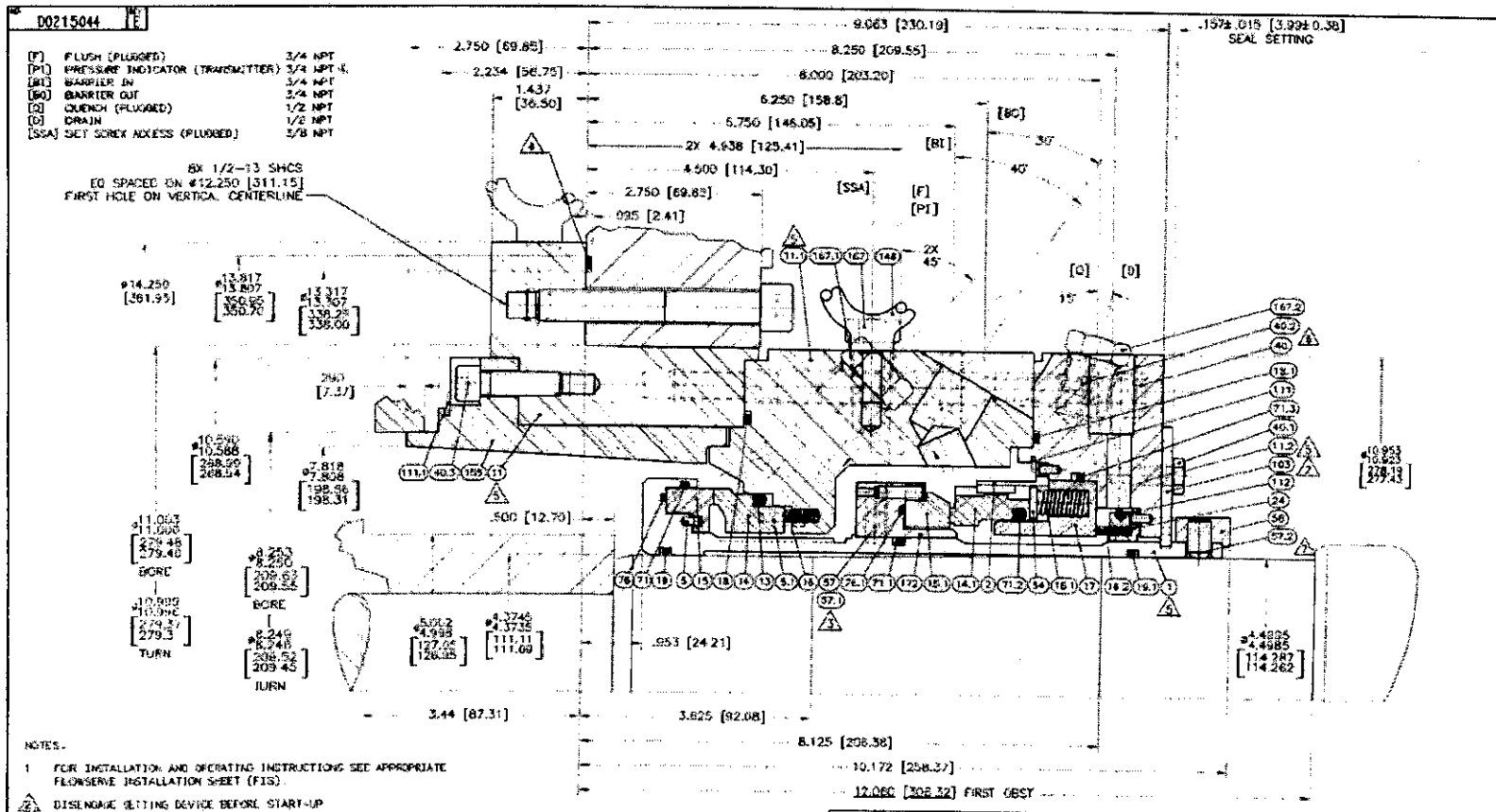

NOTES:

1. FOR INSTALLATION AND OPERATING INSTRUCTIONS SEE APPROPRIATE FLOWSERVE INSTALLATION SHEET (FIS).
2. DISENGAGE SETTING DEVICE BEFORE START-UP
3. DO NOT TORQUE DOG POINT SET SCREWS. LOCK DOG POINT SET SCREWS WITH CUP POINT SET SCREWS.
4. GASKET TO BE PROVIDED BY FLOWSERVE LAWRENCE PUMPS.
5. CERTIFICATION 12 - QMTR TO EN10204 (3.1) FOR ITEMS 1.11,11.1, AND 11.2 ONLY.
   CERTIFICATION 21 - PMI IN ACCORDANCE TO CUSTOMER SPECIFICATION SUNCOR STD 0213, REV 4 FOR ITEMS 1.11,11.1,11.2 ONLY
   CERTIFICATION 34 - CERTIFICATE OF ORIGIN.
6. TORQUE ITEMS 40.2 CROSSWISE IN 4 STEPS TO 40 FT-LBS [28.5 NM]
7. TORQUE ITEMS 57.2 CROSSWISE IN 4 STEPS TO 296 IN-LBS [32.8 NM]
8. ESTIMATED SEAL LEAK RATE IS PROVIDED AS A GENERAL GUIDANCE AND IS NOT A GUARANTEE OF PERFORMANCE. LEAK RATES HIGHER THAN THE STATED VALUE MAY INDICATE THAT THE SEAL HAS BEEN UNGAGED OR IS BEING OPERATED IN AN UNFAVORABLE EQUIPMENT OR PROCESS CONDITION. FLOWSERVE STANDARD TERMS AND CONDITIONS APPLY.
9. ALL PERFLUOROELASTOMER O-RINGS ARE KALREZ 6375.
10. MAXIMUM DESIGN PRESSURE: 2069 KPA [300 PSIG]
    MAXIMUM REVERSE PRESSURE: 1035 KPA [150 PSIG]
    (MAXIMUM DIFFERENTIAL FROM BARRIER FLUID TO PROCESS FLUID)
    MAXIMUM BARRIER PRESSURE: 2414 KPA [350 PSIG]

CUSTOM ENGINEERED SEAL DESIGN
Approved by: J. MARTIN — Date: 28-AUG-2014
Reviewed Approved by: D. MEYERS — Date: 04-AUG-2014; D. MEYERS — 15-JUL-2015

	INNER SEAL	OUTER SEAL
ESTIMATED SEAL LEAKAGE	25 cc/HR	25 cc/HR
STARTUP TORQUE	17.4Nm [154 IN-LBF]	33.1 Nm [293 IN-LBF]
RUNNING TORQUE	4.4Nm [38.8 IN-LBF]	8.3 Nm [73.3 IN-LBF]
SEAL GENERATED HEAT	3148 KJ/HR [2984 BTU/HR]	5360 KJ/HR [5081 BTU/HR]
BARRIER FLUID FLOW RATE	-	12 LPM (3.17 GPM)
SEAL CARTRIDGE WEIGHT	83 KG [183 LB] EST.	

OPERATING CONDITIONS	SG	VISCOSITY	TEMP	VAP PRESSURE	SPEED	DISCHARGE PRESSURE	SUCTION PRESSURE	CHAMBER PRESSURE	CHAMBER PRESSURE DEAD HEAD
CONDITION		cP	°C	KPAA	RPM	KPAG	KPAG	KPAG	KPAG
MAX/NORM	0.94	8	90	681	1427	1454	932	1348	1241
MINIMUM	0.94	8	80	357	1302	1365	837	1055	1241
WATER FLUSH OUT	1.0	.33	68	57.84	1695	1671	928	1103	1241
PUMP OUT	1.0	8	60-90	527-681	1435	1576	928	1119	1241

END VIEW
REDUCED SCALE:

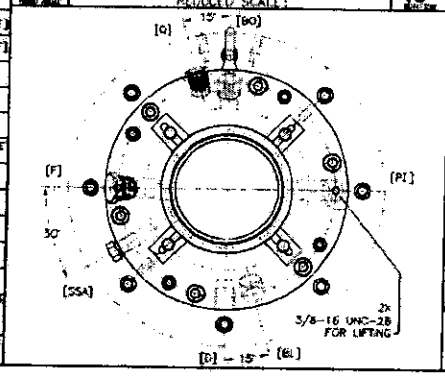

BILL OF MATERIAL NO: B0215048-01

NO	PART NO	DESCRIPTION	MATERIAL
[illegible]	[illegible]	[illegible]	[illegible]

FORT HILLS PROJECT

Jeyces Lee 07/08/15

API PLAN 02

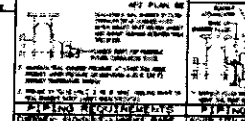

API PLAN 53B

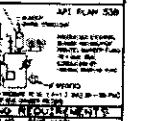

PIPING REQUIREMENTS

PIPING REQUIREMENTS

SEAL TYPE: [illegible]

FLOWSERVE

D0215044 E

THIS DOCUMENT AND ANY DESIGN, DEVELOPMENT, INVENTION OR COPYRIGHT WHICH IT MAY EMBODY OR REPRESENT ARE THE PROPERTY OF FLOWSERVE CORPORATION.
THIS DOCUMENT MAY NOT BE REPRODUCED, NOR ANY SUBJECT MATTER SHOWN HEREIN BE MANUFACTURED, WITHOUT WRITTEN PERMISSION FROM AN AUTHORIZED AGENT OF FLOWSERVE CORPORATION.

FLOWSERVE

Installation Instructions

SLM-6200

Self contained cartridge
medium duty slurry seal

Experience In Motion

1 Cartridge Installation Instructions

The following instruction manual is designed to simplify the installation of the SLM-6200 slurry seal. The SLM-6200 is a dual (pressurized double) seal with a circulating device and 2 "barrier" fluid connections.

By reading this manual and following its guidelines, seal performance can be improved by eliminating the chances of premature failure due to improper installation. In addition to these instructions, consult the seal assembly drawing included for your specific seal design, materials of construction, critical dimensions, and any auxiliary piping connections.

As you go through this manual you will find some of the instructions referenced with figure numbers. These illustrations are provided to help you visualize what the instruction is trying to explain. If these instructions are followed faithfully, the seal installation will be successful, and maintenance personnel will understand the proper procedures to follow when pump adjustment is necessary.

For special problems encountered during installation, contact your nearest Flowserve Sales and Service Representative or Authorized Distributor.

Note: The SLM-6200 has been designed to leak water barrier fluid into the process at 4 liters (1 gallon) per day. Barrier fluid must be compatable and able to be refilled while pressurized. If another barrier fluid is used leakage will increase.

Typical Dual SLM-6200 Cartridge Seal

Figure 1

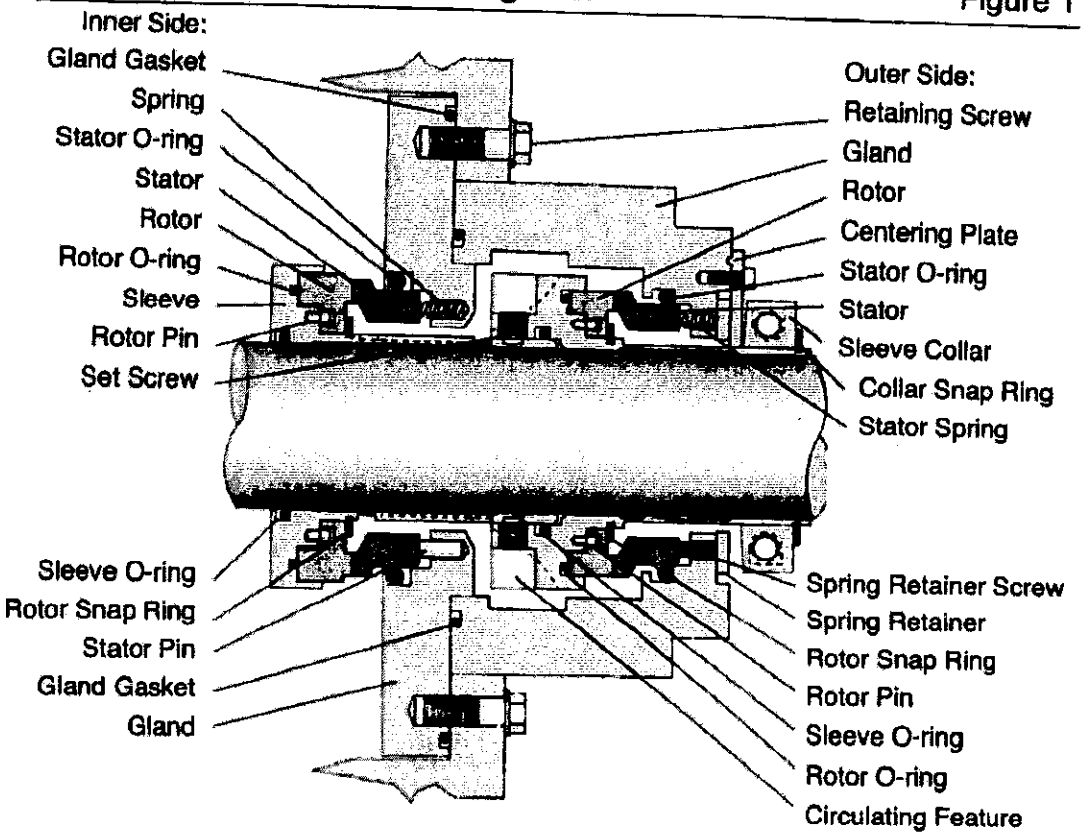

The images of parts shown in these instructions may differ visually from the actual parts due to manufacturing processes that do not affect the part function or quality.

2 Recommendations

To ensure that your SLM-6200 Mechanical Seal will provide you with the longest possible life, we recommend the following:

2.1 New radial and thrust bearings be installed in the pump.

2.2 The saddle fits of the bearing assembly should not be worn.

2.3 The axial end float of the pump shaft must not exceed 0.25 mm (0.010 inch). See Figure 2.

Check Axial Shaft Travel

Figure 2

0.25 mm (0.010 inch) Maximum Acceptable Axial Movement

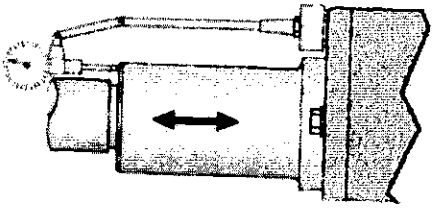

2.4 Shaft radial runout should be less than 0.0005 mm per mm (0.0005 inch per inch) of shaft/sleeve diameter. See Figure 3. Turn the shaft through 360° and observe the range of indicator movement.

Check Radial Shaft Runout

Figure 3

Maximum Acceptable Radial Runout 0.0005 mm per mm (0.0005 inch per inch) of shaft diameter

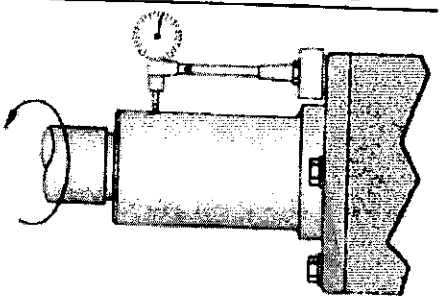

2.5 The shaft should deflect no more than 0.30 mm (0.012 inch) at the seal chamber face. See Figure 4.

Check Radial Shaft Deflection

Figure 4

Shaft should Deflect no more than 0.30 mm (0.012 inch)

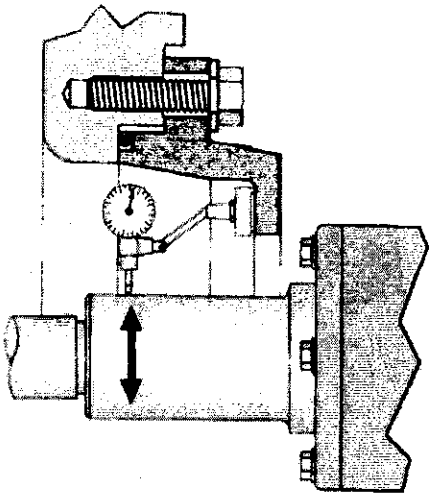

2.6 Ensure that the shaft or shaft sleeve has a 1.6 mm (0.06 inch) x 30° chamfer on the leading edge to prevent O-ring damage at seal installation.

2.7 Hardened shaft sleeves must not be used when cartridge sleeve locking is accomplished by set screws bearing directly into the shaft sleeve. Any of the sleeve collars that clamp the cartridge sleeve to the shaft sleeve may be used on hardened shaft sleeves.

3 General Instructions

3.1 Ensure that the bearing assembly is mounted correctly (central and square) to the pump pedestal and securely fastened.

3.2 Ensure that all fit locations on the pedestal are clean and free of burrs.

3.3 Clean the pump shaft/sleeve surface, making sure it is clean of product and rust and has no burrs.

3.4 If the pump design requires it, bolt seal adapter plate to equipment case/pedestal (hand tighten only).

3.5 Locate the seal fit of the adapter to the shaft by use of a dial indicator or centering jig. The equipment shaft must be concentric to the seal adapter bore to within 0.38 mm (0.015 inch). See Figure 5.

Center Adapter Plate to Shaft Figure 5

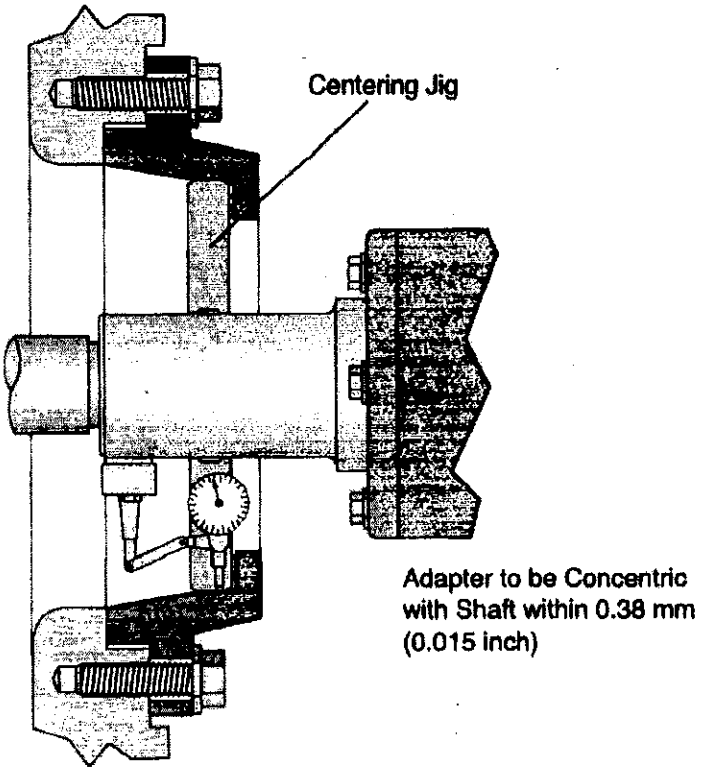

3.6 For adapters provided with a centering jig, simply insert the centering jig into the adapter and tighten adapter bolts, alternately adjusting the cover location until the centering jig can be removed by hand.

3.7 Apply a light coat of O-ring lubricant to the seal sleeve O-ring. (Silicone grease must be used with EPDM gaskets.)

Warning: Do not apply anti-seize or other lubrication to the pump shaft/sleeve. Keep the shaft/sleeve clean and dry. The use of lubricants will cause improper clamping pressure by the clamp collar.

3.8 Orient the barrier inlet and outlet ports as illustrated. See Figure 6. If the ports are not located 180° apart, position the outlet port at top dead center or as near to that as possible.

Barrier Port Orientation Figure 6

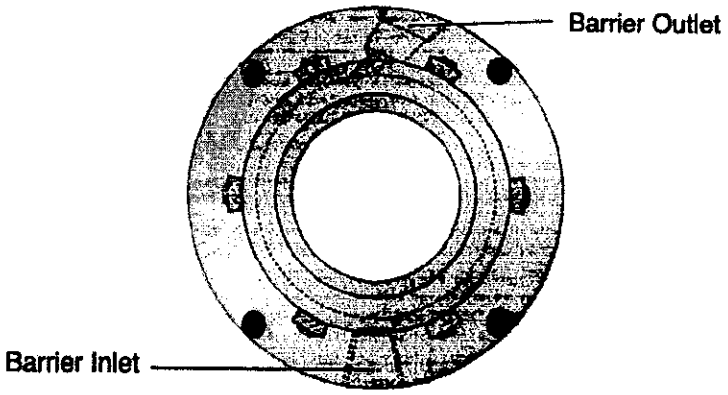

4 Wet-Side (Impeller-Side) Installation

The following steps describe installation of the seal cartridge mounted on the wet, or impeller, side of the equipment case. If your cartridge is designed to mount on the dry, or bearing, side of the equipment case, skip to section 5.

4.1 Seal chamber face runout (perpendicularity) should be less than 0.001 mm per mm (0.001 inch per inch) of indicated diameter. See Figure 7.

Check Seal Chamber Face Runout Figure 7

Maximum Acceptable Runout 0.001 mm per mm (0.001inch per inch) of indicated diameter

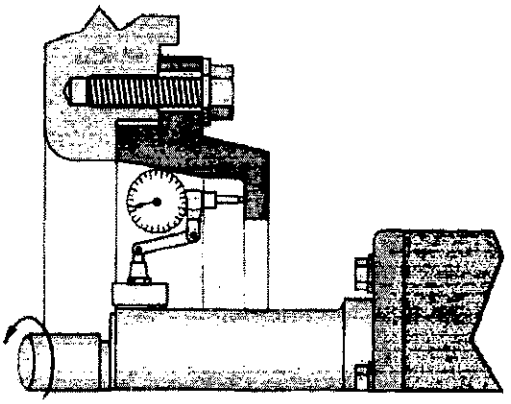

4.2 Seal chamber concentricity should be less than 0.38 mm (0.015 inch). See Figure 8. Seal life varies with alignment. Poor shaft alignment will reduce seal life.

Check Seal Chamber Concentricity

Figure 8

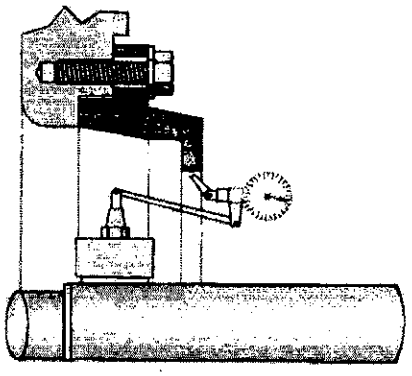

0.38 mm (0.015 inch) Maximum Seal Chamber Concentricity Runout

4.3 It is advisable to hold the inner gland gasket in place in the gland groove with contact adhesive or vacuum grease (in spots only).

With the seal clamp collar facing toward the bearing assembly, slide the complete cartridge over the pump shaft/sleeve and push the assembly back into the pump case. See Figure 9.

Warning: Do not hammer on or push against the cartridge sleeve.

Do not secure the gland retaining screws to the equipment casing at this time.

Inserting Cartridge

Figure 9

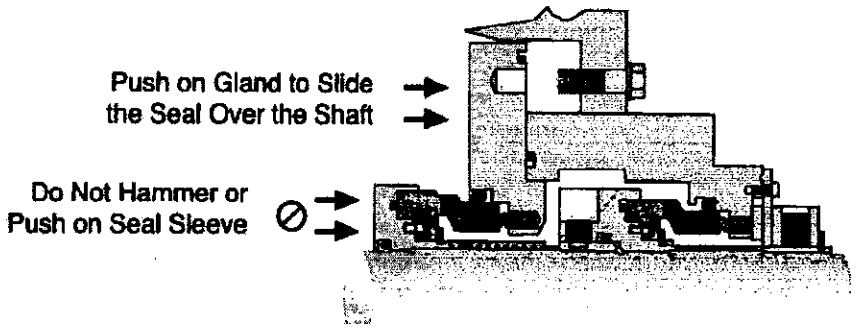

4.4 If the seal is mounted directly on the shaft, rather than on the equipment sleeve, install the impeller spacer sleeve (possibly modified).

4.5 Install the impeller and suction cover.

4.6 Make any necessary impeller adjustments.

Warning: Loosen the bearing assembly and drive belts only enough to make the adjustments. Fully retighten the bearing assembly and belts after adjustment.

4.7 Check the orientation of the gland ports and reposition as necessary. See Figure 6.

4.8 Insert the retaining screws through the rear face of the pump case and screw into the seal gland. Tighten the retaining screws evenly to pull the seal into the pump case. See Figure 10.

Cartridge in Place (Wet Side) Figure 10

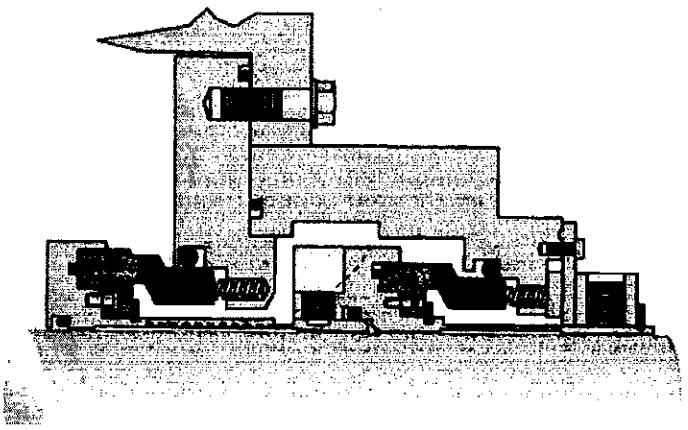

5 Dry-Side (Bearing-Side) Installation

The following steps describe installation of the seal cartridge mounted on the dry, or bearing side of the equipment case. If your cartridge is designed to mount on the wet, or impeller side of the equipment case, refer to section 4. If you have completed section 4, skip to section 6.

5.1 Seal chamber concentricity should be less than 0.38 mm (0.015 inch). Poor shaft alignment can reduce seal life. See Figure 11.

Check Seal Chamber Concentricity Figure 11

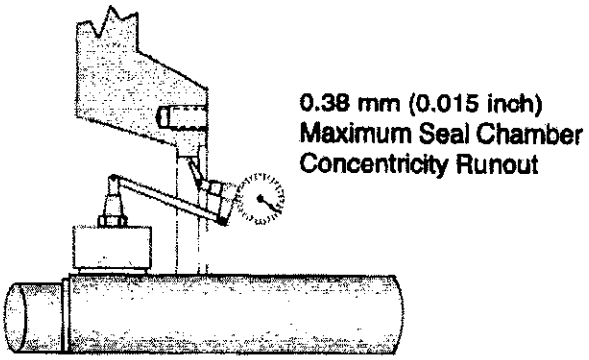

5.2 Seal mounting runout (perpendicularity) should be less than 0.001 mm per mm (0.001 inch per inch) of indicated diameter. See Figure 12. When the equipment case and shaft are properly aligned, secure the case in place.

Check Seal Chamber Face Runout

Figure 12

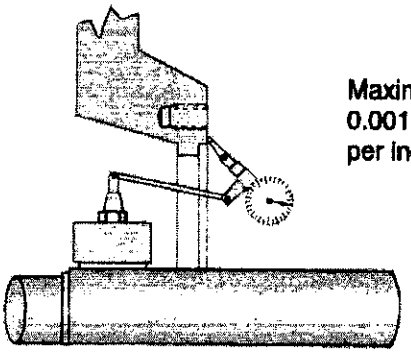

Maximum Acceptable Runout
0.001 mm per mm (0.001 inch per inch) of indicated diameter

5.3 With the seal clamp collar facing toward the bearing assembly, slide the complete cartridge over the pump shaft/sleeve and push back toward the bearing housing. See Figure 13. If the gland screws are too long to insert with the cartridge in place, insert them through the gland before sliding the cartridge fully onto the shaft.

Inserting Cartridge

Figure 13

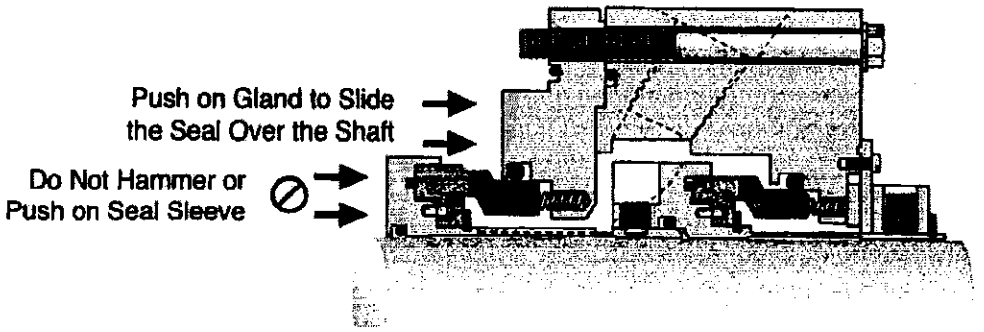

5.4 If the seal is mounted directly on the shaft, rather than on the equipment sleeve, install the impeller spacer sleeve (possibly modified).

5.5 Position and lightly secure the equipment casing in place. **Do not** secure the gland retaining screws to the equipment casing at this time.

5.6 Check the orientation of the gland ports and reposition as necessary. See Figure 6.

5.7 Install the impeller and suction cover.

5.8 Make any necessary impeller adjustments.

5.9 Slide the seal cartridge up to the equipment case. Insert the gland retaining bolts through the gland holes and screw into the threaded holes on the face of the equipment case. Tighten the retaining bolts evenly in opposing pairs. See Figure 14.

Cartridge in Place (Dry Side) Figure 14

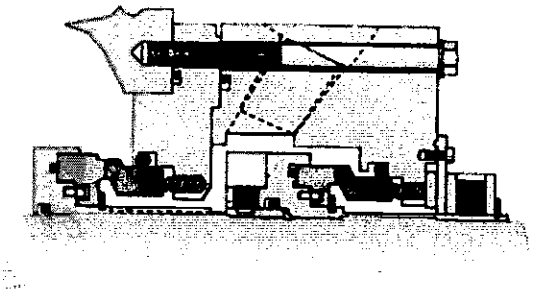

6 Completing Installation

6.1 Evenly tighten the Socket Head Cap Screws of the 2-piece split clamp collar, the Hex Head Cap Screws of the 3-piece shrink disk collar, or the Set Screws of the 1-piece sleeve collar to the proper torque values listed below.

TORQUE VALUES
N-m
(ft-lbs)

	Split Clamp	Shrink Disk Clamp	Set Screw Clamping (Dog Point)	Set Screw Penetrating (Cup Point)	
Fastener Size	**Alloy Steel**	**Alloy Steel**	**Alloy Steel**	**Stainless Steel**	**Alloy Steel**
1/4"	—	14-16 (10-12)	—	5-8 (4-6)	9-11 (7-8)
5/16"	33-35 (24-26)	27-30 (20-22)	—	14-16 (10-12)	18-20 (13-15)
3/8"	54-61 (40-45)	33-37 (24-27)	—	24-27 (18-20)	30-34 (22-25)
1/2"	122-136 (90-100)	—	68-75 (50-55)	54-57 (40-42)	81-84 (60-62)

6.2 Remove the setting plate screws. With a screwdriver, pry the setting plates clear of the gland and remove them. Keep the setting plates and screws with the seal at all times. See Figure 15.

Setting Plate Removal Figure 15

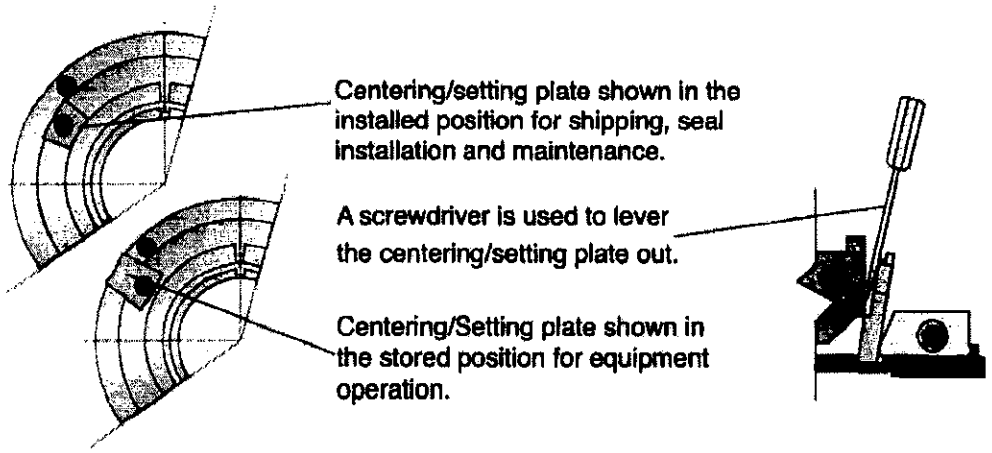

7 Barrier Fluid Piping Plans

7.1 Typical installation for a Plan 54 support system, pressurized water barrier fluid circulation by external system. See Figure 16.

See Flowserve Piping Plan Guide FTA160 or your local Flowserve representative for best practice guidelines for installation of Plans 53A, 53B or 53C.

Note: The SLM-6200 has been designed to leak water barrier fluid into the process at 4 liters (1 gallon) per day. Barrier fluid must be compatable and able to be refilled while pressurized. If another barrier fluid is used leakage will increase.

Plan 54 Figure 16

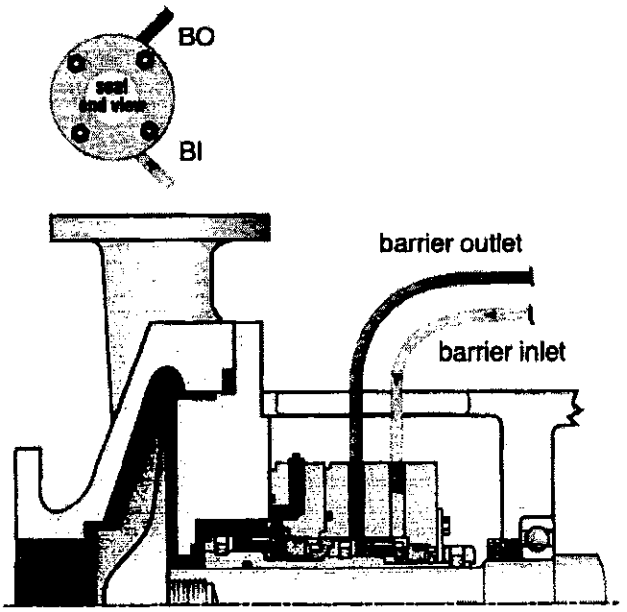

7.2 Connect the seal gland barrier outlet (BO) port to the return side of the external system. 3/4" tubing is recommended for the seal circulation piping on both outlet and inlet runs. Piping runs should be smooth, with a minimum number of turns. Turns should be accomplished by large radius bends rather than elbow fittings.

7.3 Connect the seal gland barrier inlet (BI) port to the supply side external system.

7.4 Connect a regulated pressure source and and pressure gages to monitor the barrier pressure. Barrier fluid temperature must be kept below 79°C (175°F).

7.5 Your SLM-6200 Mechanical Seal is now ready for operation.

Warning: To ensure that the mechanical seal does not run dry, leave motor v-belts or drive coupling off the pump until the motor has been tested for rotation.

Note: For any subsequent impeller or bearing adjustment, reverse steps 6.1, and 6.2. If any problems arise during installation, **Do not** try to force anything, contact your nearest Flowserve Sales and Service Representative or Authorized Distributor.

8 Start Up and Shut Down Procedures for the SLM-6200 Slurry Seal

The SLM-6200 seal incorporates its own operating environment. To insure the proper conditions in this environment, observe the following procedures for pump operation:

8.1 Pump Start-Up

8.1.1 Pressurize the water barrier fluid system to 2 bar (30 psi) above the maximum expected seal chamber pressure and be sure it is flowing.

8.1.2 Open the valve on the suction line to ensure that the pump is fully flooded with product.

8.1.3 A pump flooded with liquid must be ensured, before starting. If possible, open washout/bleed venting valve to release any air that may be trapped in the piping. Close the valve after a steady stream of liquid flows from it. If little or no liquid appears, do not start the pump. This means that part of the piping system is blocked with product.

8.1.4 Partially open the discharge valve to ensure that water hammer or cavitation does not occur at start-up.

8.1.5 After start up, slowly open the discharge valve. This will keep a false/artificial head/back-pressure on the pump until the line fills.

8.2 Pump Shut-Down

8.2.1 Stop the pump.

8.2.2 Close the discharge valve.

8.2.3 Close the suction valve.

8.2.4 Before depressurizing the water barrier system, drain all product from the pump seal chamber or flush with clean water or process fluid to prevent solids in the slurry (either free solids or dissolved solids that will precipitate out when temperature is reduced during standby) from settling in the seal chamber or volute. This also prevents product from contaminating the barrier system when barrier pressure is released.

TO REORDER REFER TO
B/M #_____
F.O. _____

9 General Operation

Pressure must be maintained on the barrier fluid above product-side pressure at all times whenever product will be present in the seal chamber. If the barrier fluid ever becomes contaminated with product, the barrier system must be flushed and cleaned.

10 Repair

This product is a precision sealing device. The design and dimension tolerances are critical to seal performance. Only parts supplied by Flowserve should be used to repair a seal. To order replacement parts, refer to the part code and B/M number. A spare backup seal should be stocked to reduce repair time.

When seals are returned to Flowserve for repair, **decontaminate the seal assembly** and include an order marked **"Repair or Replace." A signed certificate of decontamination** must be attached. **A Material Safety Data Sheet (MSDS) must be enclosed** for any product that came in contact with the seal. The seal assembly will be inspected and, if repairable, it will be rebuilt, tested, and returned.

For technical assistance or additional seal sizes and conditions not listed, contact your local Flowserve Sales and Service Representative or Authorized Distributor.

FIS159eng REV 7/13 Printed in USA

To find your local Flowserve representative
and find out more about Flowserve Corporation,
visit www.flowserve.com

USA and Canada
Kalamazoo, Michigan USA
Telephone: 1 269 381 2650
Telefax: 1 269 382 8726

Europe, Middle East, Africa
Roosendaal, the Netherlands
Telephone: 31 165 581400
Telefax: 31 165 554590

Asia Pacific
Singapore
Telephone: 65 6544 6800
Telefax: 65 6214 0541

Latin America
Mexico City
Telephone: 52 55 5567 7170
Telefax: 52 55 5567 4224

Flowserve Corporation has established industry leadership in the design and manufacture of its products. When properly selected, this Flowserve product is designed to perform its intended function safely during its useful life. However, the purchaser or user of Flowserve products should be aware that Flowserve products might be used in numerous applications under a wide variety of industrial service conditions. Although Flowserve can provide general guidelines, it cannot provide specific data and warnings for all possible applications. The purchaser/user must therefore assume the ultimate responsibility for the proper sizing and selection, installation, operation, and maintenance of Flowserve products. The purchaser/user should read and understand the installation instructions included with the product, and train its employees and contractors in the safe use of Flowserve products in connection with the specific application.

While the information and specifications contained in this literature are believed to be accurate, they are supplied for informative purposes only and should not be considered certified or as a guarantee of satisfactory results by reliance thereon. Nothing contained herein is to be construed as a warranty or guarantee, express or implied, regarding any matter with respect to this product. Because Flowserve is continually improving and upgrading its product design, the specifications, dimensions and information contained herein are subject to change without notice. Should any question arise concerning these provisions, the purchaser/user should contact Flowserve Corporation at any one of its worldwide operations or offices.

© 2013 Flowserve Corporation

SECTION 8:
COUPLING INFORMATION

FORT HILLS

SK E&C

Vendor Data Document Review Coversheet

SAP No: 03-00114-FT-SE

Purchase Order No: 14037D-ME-PO-MF191-01

Purchase Order Title: API SLURRY PUMP

Vendor Name: FLOWSERVE LAWRENCE PUMPS

Fort Hills Document No: TBA

Rev: 1A **Rev Date:** 2015-10-30

Document Title: COUPLING DRAWING

Vendor Document No: COUP612-A-G600A **Rev:** 0

VDDRL Code: C-35

Equipment Tag No: 600G-1B 600G-2B 600G-3B

1. ☐ Reviewed without comments. Work may proceed.
2. ☐ Reviewed with comments. Work shall proceed subject to incorporation of comments.
3. ☐ Do not proceed. Stop work on affected areas.
4. ☐ Review not required / for information only.
5. ☐ Final certified.

Permission to proceed does not constitute acceptance or approval of design details, calculations, analysis, test methods or material developed or selected by the supplier and does not relieve supplier from full compliance with contractual obligations.

BY: _____ DATE: _____

SKEC ENGINEER TO PRINT NAME AND SIGN (DD/MM/YY)

1A	2015-10-30	For Review	LG	MP	RZ
REV. (PROJECT)	ISSUE DATE	ISSUE PURPOSE	SUBMITTED BY (VENDOR)	CHECKED BY (VENDOR)	APPROVED BY (VENDOR)

DRAWING No	ISSUE
GA-172268	B

THESE COMMODITIES, TECHNOLOGY OR SOFTWARE ARE EXPORTED FROM THE UNITED STATES IN ACCORDANCE WITH THE EXPORT ADMINISTRATION REGULATIONS. DIVERSION CONTRARY TO THE U.S. LAW PROHIBITED.

A	Ref First Issue	B	Ref ER 7086
By TLS	Date 03/17/2016	By TLS	Date 3/28/2016

Item	Drawing No.	Matl Code	Description	Material	Qty	Spares
1	TLCS-0300-0180-4572	FX01	TRANSMISSION UNIT ASSEMBLY	301 SS HI/CARBON STEEL	1	X
2	K-002-0742	C286	HUB	CARBON STEEL	1	
	1162 1116 000	C237	SETSCREW	ALLOY STEEL	1	
3	HC8049-0300-46A	C286	HUB	CARBON STEEL	1	
	1150 1308 000	C237	SETSCREW	ALLOY STEEL	1	
4	HC798-07508	FX01	BOLT&SET	ISO GR 12.9	1	X
5	HC798-09008	FX01	BOLT&SET	ISO GR 12.9	1	X

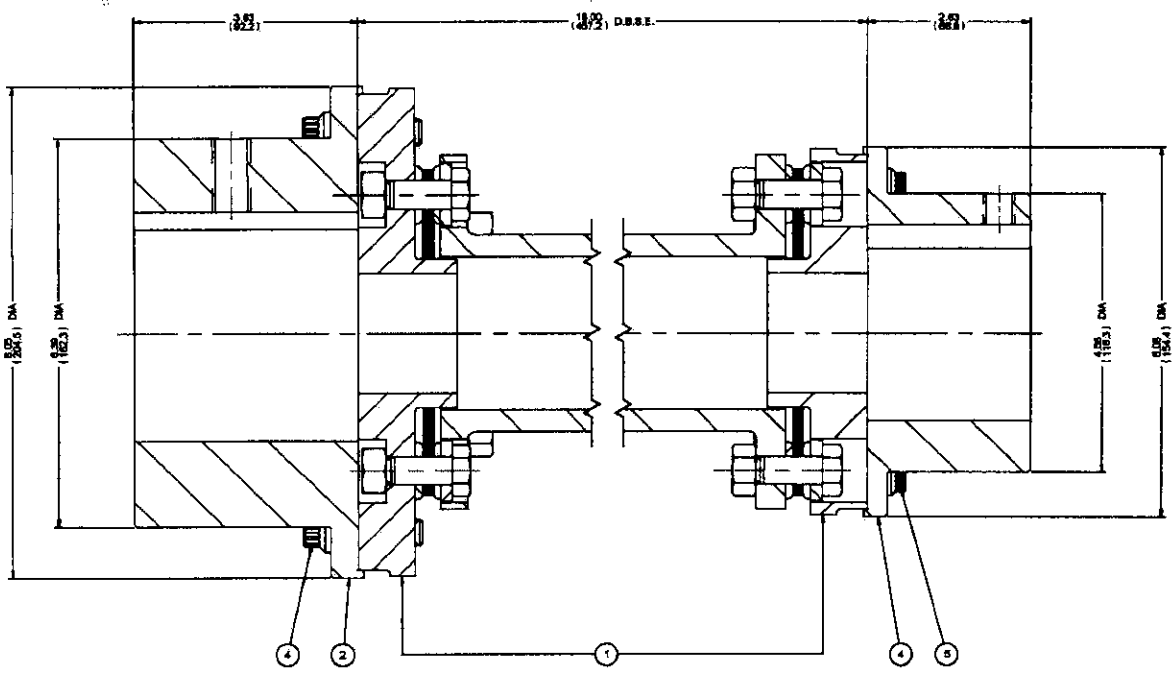

DRIVER END CENTER OF GRAVITY
47.82 Lb [21.73 Kg] @ 0.51 in [13.0 mm]
from end of shaft back toward equipment

DRIVEN END CENTER OF GRAVITY
25.08 Lb [11.39 Kg] @ 0.20 in [5.1 mm] from
end of shaft away from equipment

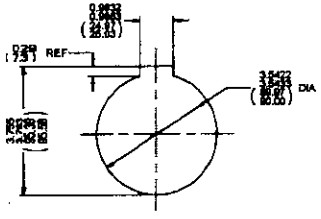

DRIVER BORE & KEYWAY
BORE CODE: K-002-0742
> 2, 0.500-13 UNC PULLER HOLES
> 1, 0.625-11 UNC SET SCREW OVER KEYWAY

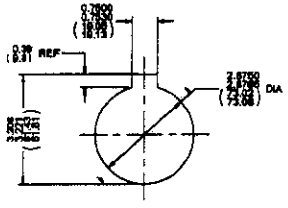

DRIVEN BORE & KEYWAY
BORE CODE: 46A
> 2, 0.375-16 UNC PULLER HOLES
> 1, 0.500-13 UNC SET SCREW OVER KEYWAY

NOTES:
1. REFER TO INSTALLATION INSTRUCTIONS CTI-301L BEFORE INSTALLATION
2. ITEM 4 BOLT TORQUE: 60 FT-LB (82 NM).
   ITEM 5 BOLT TORQUE: 20 FT-LB (27 M).
3. COUPLING COMPONENT BALANCED TO ISO G2.5

CUSTOMER DATA:
END USER: SUNCOR FORT HILLS ENERGY LP
JOB NO.: 816891
PUMP SIZE, TYPE: HPX 6000, 10 x 12 x 18
FLP COUPLING PART NO.: 305-03-00443
LINE 1

TECHNICAL DATA — Based on 1/3 shaft penetration

REF	COMPONENT	WEIGHT Lb (Kg)	INERTIA Lb in² (x10^-3 Kg m²)	TORSIONAL STIFFNESS x10^6 Lb in/rad (MNm/rad)
2	DRIVING HUB	26 (11.8)	194 (56.7)	-
3	DRIVEN HUB	9 (4.0)	37 (10.8)	-
1	TRANSMISSION UNIT ASSEMBLY	38 (17.2)	190 (55.5)	-
	COUPLING ASSEMBLY	73 (33.1)	421 (123.2)	2.10 (0.24)

MISALIGNMENT CAPABILITY

AXIAL DEFLECTION x in (x mm)		AXIAL FORCE Lb (N)		PARALLEL LATERAL MISALIGNMENT	ANGULAR MISALIGNMENT	ANGULAR STIFFNESS
NORMAL	TRANSIENT	NORMAL	TRANSIENT	in (mm)	Degree/End	Lb in/Deg (Nm/Deg)
0.055 (1.40)	0.083 (2.10)	270 (1,201)	609 (2,703)	0.091 (2.31)	0.33	620 (70)

COUPLING CAPABILITY

RATED TORQUE [Lb in (Nm)]	PEAK TORQUE [Lb in (Nm)]	SPEED [RPM]
26,380 (2,984)	50,700 (5,728)	15,300

COUPLING DUTY

DUTY	POWER	SPEED	TORQUE
NORMAL	400.0 HP (298.3 kW)	1,820 RPM	14,898 Lb in (1,674 Nm)

CUSTOMER DATA

CUSTOMER	FLOWSERVE US INC.	PO No 84761	ITEM -
CUSTOMER DRG#	FLP COUPLING PART NO.: 305-03-00443		
JOHN CRANE REF	6794488-1	GPN -	QTY 8
PROJECT# No	-		
PLANT ITEM No	-		
END USER	SUNCOR FORT HILLS ENERGY LP		
END USER LOCATION	-		
DRIVEN EQUIPMENT	PUMP	DRIVER EQUIPMENT	MOTOR

COUPLING DESIGNATION	TLCS/0300/KA/GA-172268
COUPLING DESCRIPTION	TLCS-0300-0378-4572

SCALE	DATE	DRAWN	CHECKED	APPROVED	DESIGN AUTH.
1:1	02/17/16	TLS	-	-	USSBEN

Units: inch (mm)

John Crane

DRAWING No: GA-172268

ISSUE: B

All intellectual property rights (including but not limited to copyright and design rights whether registered or unregistered) in relation to this drawing together with the information contained in this drawing (including but not limited to know-how and confidential information) is proprietary to John Crane. Reproduction (whether in whole or in part) or use in any way whatsoever of this drawing or of any information contained therein is prohibited except with the prior written consent of John Crane. All rights in relation to this drawing are reserved.

GENERAL DESCRIPTION

The TLC coupling is a precision built 8-link coupling comprising two flexible disc assemblies connected by a torque tube. The flexing discs are stainless steel, the bolts high tensile steel and the other components forged and machined carbon steel. Alternate materials are available and, if supplied, are listed on the assembly drawing.

HANDLING AND STORAGE

1. The coupling is normally dispatched with standard commercial packing. The packing case should contain a copy of the appropriate assembly drawing (if requested), the Installation and Maintenance Instructions and a Balancing Certificate (if Dynamic Balancing required).

2. During transport, handling and storage, the gagging sleeves (painted red for identification) should be in position.

   NOTE: Gagging sleeves are supplied only when required for the application, NOT with every coupling.

3. The coupling should be stored horizontally and should not be kept on end for long periods.

4. Avoid shocks during handling and protect against corrosion if stored for long periods.

5. On receipt and immediately before assembly, check that items are undamaged and that pilots and recesses are free from burrs. If a balanced unit is supplied note the location and orientation of any match marks.

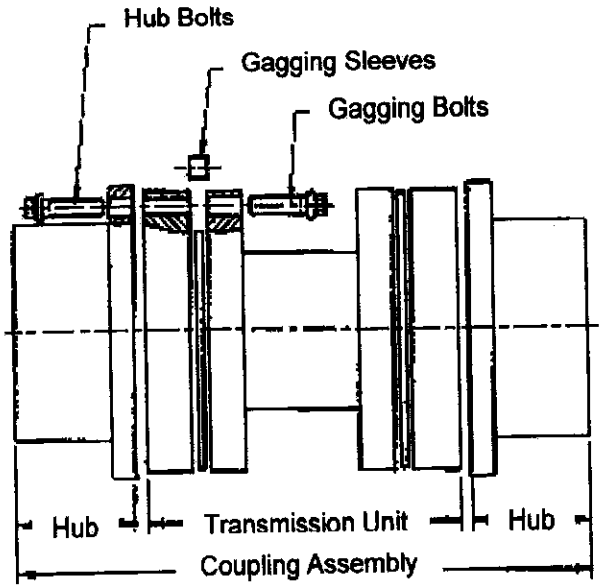

Figure 1

INSTALLATION PROCEDURE

1. Reference the assembly drawing(s) for all dimensions.
2. Inspect the coupling to insure that it is undamaged and note any match marks that must be aligned when the coupling is installed.
3. Disassemble the coupling by removing the hub bolts on each end. Fit the appropriate hubs (and/or adapters) to the driver and driven shafts in the usual manner insuring that the shaft ends are flush with the faces of the hubs (Figure 2). For 'interference fits' we recommend heating the hubs in oil or oven and quickly positioning on shafts (do not use spot heat or exceed 350° F (177° C) as this may cause flange distortion).

   If hubs are to be hydraulically fitted, refer to CI-01 for recommended procedure.

   NOTE: If axial setting adjustments are necessary (see Step 5) corrections can be made on straight cylindrical shafts by overhanging the hub. Hub overhang must not exceed 0.13 inch (3.3 mm) and shaft must never extend beyond the hub face. Axial adjustment of hubs is not recommended for tapered shafts.

4. Check that the hub pilots and flange diameters are concentric to the center of rotation to within 0.004 inch (0.1 mm) total indicator runout (T.I.R.) and that the hub face is square to the center of rotation to within 0.004 inch (0.1 mm) T.I.R. (Figure 2). Refer to any specific requirements or standards for maximum allowable value.

5. Check the distance between shaft ends (DBSE) taking into account, where applicable, any axial movement that may occur in operation (i.e., thermal expansion, magnetic center location, etc.). The final operating distance must equal that shown on the assembly drawing.

   NOTE: When equipment can not be moved to obtain the correct DBSE, axial adjustments are possible by overhanging hubs on cylindrical straight shafts (see Step 3). If hub adjustments are made, the mating face to face dimension (taking into account any axial movement that may occur in operation) must equal the overall free length of the transmission unit (Figure 3).

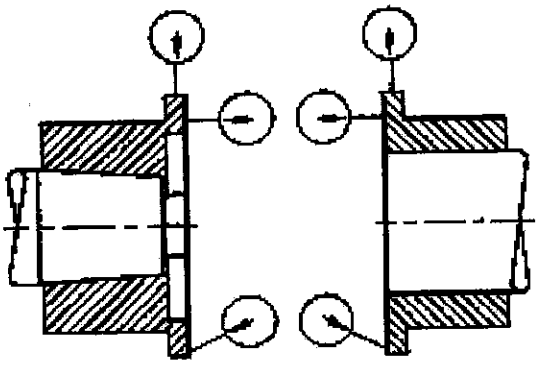

Figure 2

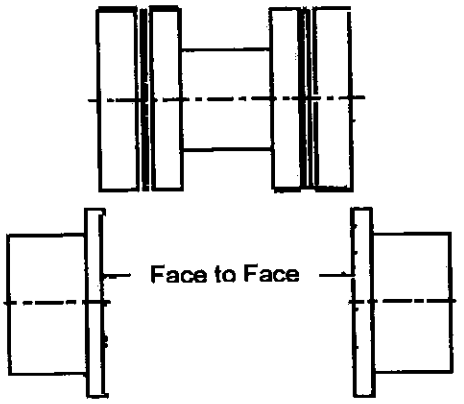

Figure 3

ALIGNMENT

GOOD ALIGNMENT IS THE KEY TO TROUBLE FREE RUNNING AND CARE AT THE INSTALLATION STAGE WILL BE AMPLY REPAID.

Normal fitting practice will usually produce alignments well within what is required, but any specific requirements on the assembly drawing must be observed.

The instructions in CA-300, "Coupling Alignment – Graphical Method" are recommended as a standard alignment procedure. Your local John Crane Flexibox representative can offer the alignment equipment packages and any additional worksheets upon request.

Generally, shaft alignment should be within 0.001 inch/inch (mm/mm) of flange diameter for angular readings and 0.001 inch/inch (mm/mm) of shaft separation for parallel offset readings.

Equipment should be doweled after alignment.

NOTE: If actual shaft separation is greater than anticipated and equipment can not be moved to align correctly, it may be possible to correct the error when installing hubs (See page 2).

INSTALLING TRANSMISSION UNIT

1. Identify the driving and driven end of the transmission unit (if suitably marked) while removing the gagging screws and gagging sleeves (painted red for identification). Reinstall the gagging screws and compress (by tightening screws) each disc unit assembly by equal amounts until the overall length of the transmission unit is less than the hub flange separation, thus enabling the transmission unit to be inserted between hubs.

   Compress both ends equally, do not over-compress.

   NOTE: Short shaft separations do not permit the use of gagging screws on some sizes. For these applications, compression of the transmission unit is possible by hand for all small sizes and using clamps or similar tools for large units. Screwdriver slots are provided for prying the unit during installation.

2. Check that all pilots and recesses are free of burrs. Bring the compressed transmission unit into position between the hubs, making sure to align any match marks. Loosely install one hub bolt at each end to help align bolt holes later.

3. Gradually remove gagging screws insuring that pilots and recesses are engaged parallel and square to the flange faces. Insert hub bolts and tighten to the torque values given on page 4. In many cases, hub bolts are also used as gagging screws and must be reinserted as hub bolts.

   Do not tighten hub bolts with gagging screws installed.

4. With the coupling bolted in position, check that the 'as fitted' concentricities correspond with those achieved during alignment.

TIGHTENING TORQUES

The bolts are supplied pre-lubricated and no further lubricant should be applied. The table below gives figures for normal use. Occasionally, for particular duties the figure may vary and in such cases the required torque values will be quoted on the assembly drawing(s) supplied with the coupling.

	Torque - Ft. Lbs. (Nm)			Torque - Ft. Lbs. (Nm)	
Coupling Size	Standard Hub	Large Hub	Coupling Size	Standard Hub	Large Hub
0300	20 (27)	60 (81)	6000	560 (759)	Not Applicable
0500	40 (54)	95 (129)	6010	150 (203)	270 (366)
0750	60 (81)	150 (203)	8500	270 (366)	270 (366)
1050	95 (129)	150 (203)	9009	370 (502)	Not Applicable
1400	150 (203)	Not Applicable	9012	370 (502)	Not Applicable
1500	150 (203)	270 (366)	9013	270 (366)	430 (583)
1850	270 (366)	Not Applicable	9015	560 (759)	Not Applicable
2000	150 (203)	95 (129)	9017	430 (583)	270 (366)
2600	270 (366)	95 (129)	9021	270 (366)	430 (583)
3000	370 (502)	Not Applicable	9022	800 (1085)	Not Applicable
3350	95 (129)	150 (203)	9036	430 (583)	645 (875)
4200	370 (502)	Not Applicable	9049	645 (875)	Not Applicable
4250	150 (203)	150 (203)			

REMOVAL OF TRANSMISSION UNIT

1. Remove hub bolts from each end of coupling. Using the gagging screws (or hub bolts) install and compress (by tightening screws) each disc unit assembly by equal amounts until the transmission can be removed from between the hubs. If necessary, 'crack' the pilot fits using the hub bolts threaded into the tapped holes of each hub flange.

MAINTENANCE AND INSPECTION

1. Under normal operating conditions no servicing or maintenance should be necessary. Periodically the bolts should be checked for tightness and the discs checked for any visible signs of distress. If the hubs or shafts have been disturbed for any reason alignment must be checked.

   Any dismantling or remedial work on the disc units will invalidate the dynamic balance.

2. In the event of failure it is essential that the true cause of failure is found and corrected before a new unit is put into service.

   The most likely faults will be excessive misalignment, extreme overload, or a combination of both.

3. It is recommended that all self-locking fasteners be replaced after 10 usages.

WARNING

All rotating power transmission products are potentially dangerous. They should be used according to the manufacturer's recommendations and appropriate safety standards. It is the responsibility of the user to comply with any such standards.

SECTION 9:
DRIVER DATA

FORT HILLS

SK E&C

Vendor Data Document Review Coversheet

SAP No: 03-00114-FT-SE

Purchase Order No: 14037D-ME-PO-MF191-01

Purchase Order Title: API SLURRY PUMP

Vendor Name: FLOWSERVE LAWRENCE PUMPS

Fort Hills Document No: VP612-P-29060-1

Rev: 1D **Rev Date:** 2015-07-06

Document Title: MOTOR DRAWING

Vendor Document No: MD612-A-G2102A **Rev:** 3

VDDRL Code: P-21, P-22

Equipment Tag No: 612GM-2102A, 612GM-2102B, 612GM-2202A, 612GM-2202B, 612GM-2302A, 612GM-2302B

1. ■ Reviewed without comments. Work may proceed.
2. ☐ Reviewed with comments. Work shall proceed subject to incorporation of comments.
3. ☐ Do not proceed. Stop work on affected areas.
4. ☐ Review not required / for information only.
5. ☐ Final certified.

Permission to proceed does not constitute acceptance or approval of design details, calculations, analysis, test methods or material developed or selected by the supplier and does not relieve supplier from full compliance with contractual obligations.

BY: Jeycee Lee
SKEC ENGINEER TO PRINT NAME AND SIGN

DATE: 21 / 07 / 15
(DD/MM/YY)

1D	2015-07-06	For Review	LG	MP	RZ
1C	2015-05-13	For Review	LG	MP	RZ
1B	2015-03-31	For Review	LG	MP	RZ
1A	2015-01-14	For Review	LG	MP	RZ

FORT HILLS

SK E&C

REV. (PROJECT)	ISSUE DATE	ISSUE PURPOSE	SUBMITTED BY (VENDOR)	CHECKED BY (VENDOR)	APPROVED BY (VENDOR)

HYUNDAI HEAVY INDUSTRIES CO., LTD.

TAG NO. :
6120M-2102A, 6120M-2102B
6120M-2202A, 6120M-2202B
6120M-2302A, 6120M-2302B

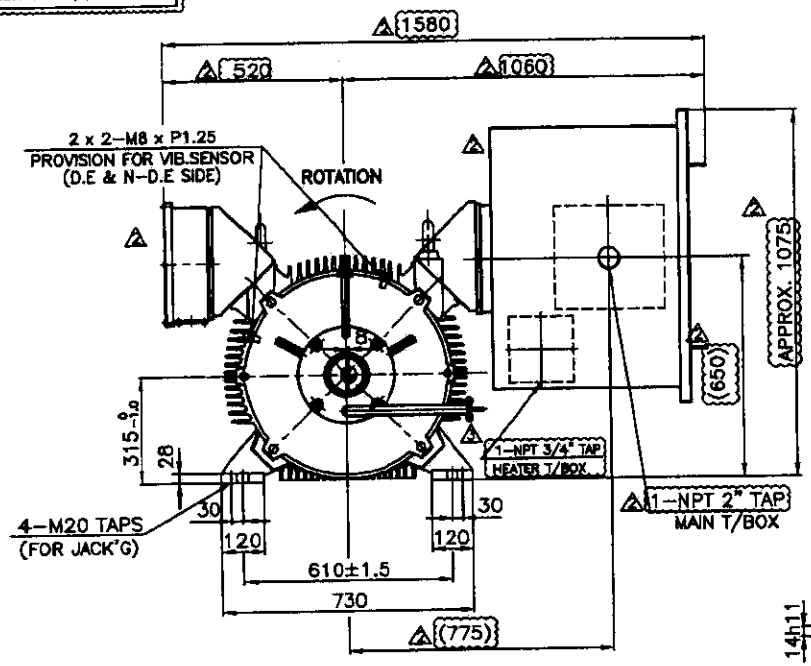

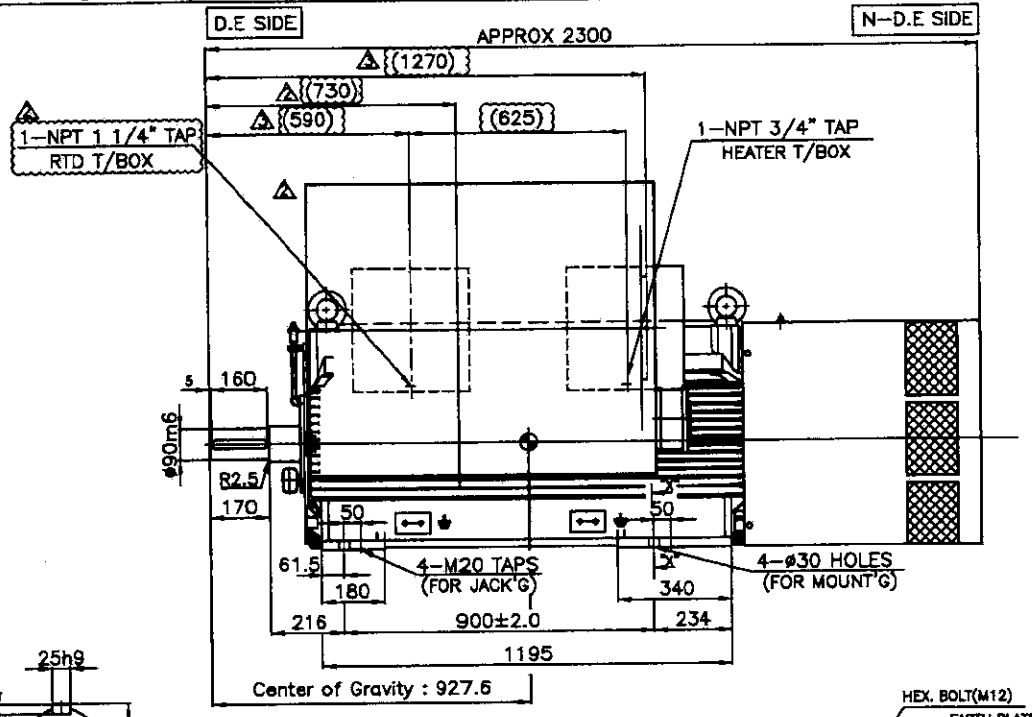

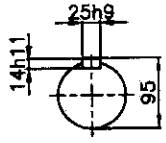

DRIVE END

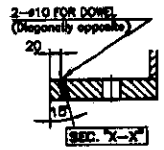

SEC. "X-X"

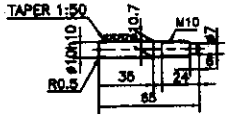

TAPER PIN

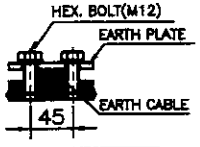

EARTHING TERMINAL

TECHNICAL INFORMATION

1) BEARING

Bearing		Drive End	Non-Drive End
Bearing Type		6320C3	6317C3
Lubricant Type		GREASE	GREASE
Grease Type		Precision Syn EMB (Syn stands for Synthetic)	
Initial Charge Quantity		245 g	150 g
Make-Up	Quantity	74 g	45 g
	Interval	4 MONTHS	4 MONTHS

2) CONTROL SETTING(Included Ambient Temp.):

	Winding(W.T.D)	Bearing(B.T.D)
Alarm	130 °C	100 °C
Trip	135 °C	105 °C

3) WINDING TEMPERATURE DETECTOR (Ex e II)
A) Number and Type : 2ea/Phase & Pt 100 ohm at 0°C
4) BEARING TEMPERATURE DETECTOR (Ex e II)
A) Number and Type : 1ea/Bearing & Pt 100 ohm at 0°C Dual type
5) SPACE HEATER FOR FRAME(Ex e II) OPERATING : 1 Phase, 120 V, 100 W
RATING : 1 Phase, 240V, 400W
6) SPACE HEATER FOR MAIN T/BOX(Ex e II) : OPERATING : 1 Phase, 120 V, 75 W

THREE PHASE INDUCTION CAGE ROTOR MOTOR (TEFC)

TYPE	OUTPUT	POLE	VOLT.	FREQ.	PROT.	MOUNT'G	BEARING D.E SIDE	BEARING N-D.E SIDE	TOTAL WEIGHT	MAX. FOUND. LOAD BY 2PHASE SHORT CIRCUIT TORQUE. DOWN	UP
HNE6 318-48E	400 HP	4 P	4000 V	60.5 Hz	IP 55	B3	6320C3	6317C3	2020 kg	25 kN	5 kN

ROTOR WEIGHT	ROTOR UNBALANCED FORCE	DYNAMIC LOAD DOWN	DYNAMIC LOAD UP
718 kg	338.2 N	15 kN	0 kN

NOTE
1) THIS BOTH SIDES ARE INSULATED(DE SIDE BEARING IS SHORT-CIRCUITED WITH A EARTHING LUG) TO BE PREVENT BEARING DAMAGE FROM SHAFT CURRENT.
2) THIS MOTOR CANNOT WITHSTAND AXIAL THRUST LOAD COMING FROM THE DRIVE END SIDE.

REV	DATE	CONTENTS	REVD BY	CHKD BY	CHKD BY	APPD BY
3	'15.03.26	REVISION OF MARK.	G.E.KIM			J.G.KIM
2	'15.03.11	REVISION OF MARK.	G.E.KIM			J.G.KIM
1	'14.12.18	REVISION OF MARK.	J.H.LEE			J.G.KIM

Q'TY	DESCRIPTION	MATERIAL	DIMENSION	WEIGHT	PART NO.	REMARK	NO.

APPD BY	J.G.KIM	UNIT	mm
CHKD BY		SCALE	1/16
CHKD BY		PROJEC'N	3각법(3rd Angle)
DSND BY	J.H.LEE	DATE	2014-12-10

SUBJECT: HNE6 318-48E
DWG SIZE: A3 (1:16)
TITLE: OUTLINE

HYUNDAI HEAVY INDUSTRIES CO., LTD.

REF. NO	4RMH576	Sheet No.	of
DWG NO	HM-092313	Revision No.	3

THIS DRAWING IS PROPRIETARY TO HHI. NO PART OF THIS DRAWING MAYBE REPRODUCED WITHOUT THE PERMISSION OF HHI.

FORT HILLS

SK E&C

Vendor Data Document Review Coversheet

SAP No: 03-00114-FT-SE

Purchase Order No: 14037D-ME-PO-MF191-01

Purchase Order Title: API SLURRY PUMP

Vendor Name: FLOWSERVE LAWRENCE PUMPS

Fort Hills Document No: VP612-G-29274-1

Rev: 1B **Rev Date:** 2015-07-06

Document Title: Motor Terminal Box and Wiring Diagram

Vendor Document No: MTBW612-A-G2102A **Rev:** 1

VDDRL Code: P-30, P51

Equipment Tag No: 612GM-2102A, 612GM-2102B, 612GM-2202A, 612GM-2202B, 612GM-2302A, 612GM-2302B

1. ■ Reviewed without comments. Work may proceed.
2. ☐ Reviewed with comments. Work shall proceed subject to incorporation of comments.
3. ☐ Do not proceed. Stop work on affected areas.
4. ☐ Review not required / for information only.
5. ☐ Final certified.

Permission to proceed does not constitute acceptance or approval of design details, calculations, analysis, test methods or material developed or selected by the supplier and does not relieve supplier from full compliance with contractual obligations.

BY: Jeycee Lee
SKEC ENGINEER TO PRINT NAME AND SIGN

DATE: 21 / 07 / 15
(DD/MM/YY)

1B	2015-07-06	For Review	LG	MP	RZ
1A	2015-05-13	For Review	LG	MP	RZ
REV. (PROJECT)	ISSUE DATE	ISSUE PURPOSE	SUBMITTED BY (VENDOR)	CHECKED BY (VENDOR)	APPROVED BY (VENDOR)

HYUNDAI HEAVY INDUSTRIES CO., LTD.

THIS DRAWING IS PROPRIETARY TO HHI. NO PART OF THIS DRAWING MAYBE REPRODUCED WITHOUT THE PERMISSION OF HHI.

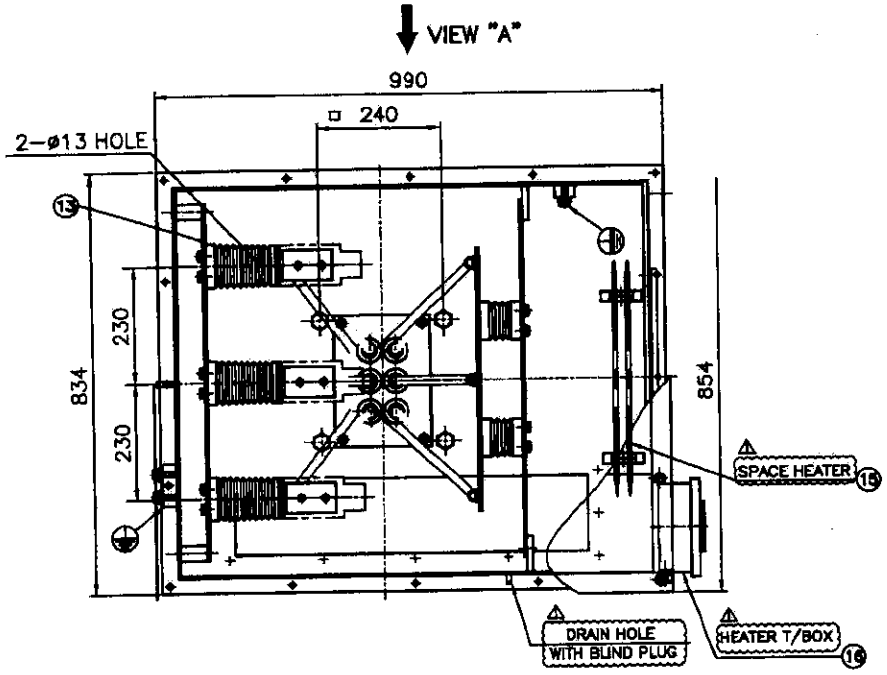

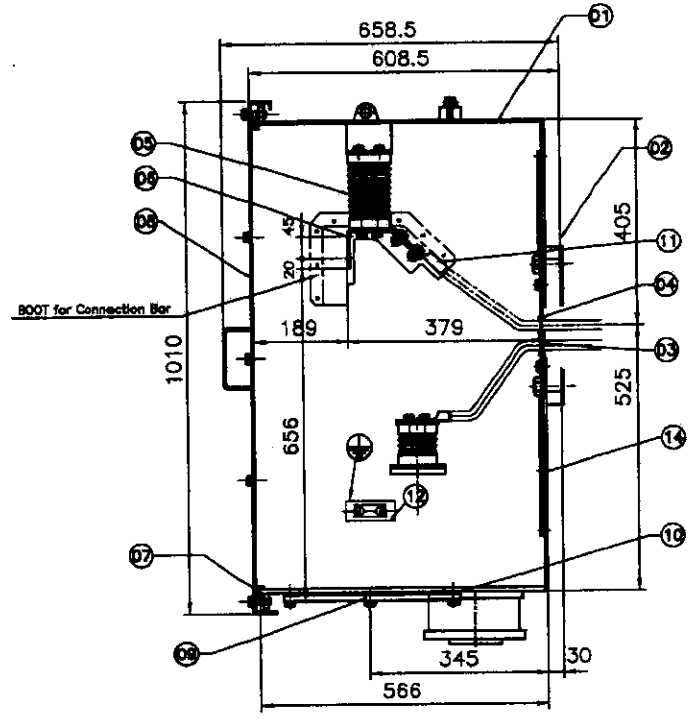

VIEW "A"

Q'TY	DESCRIPTION	MATERIAL	NO.
–	HEATER T/BOX ASSY	SS400	16
–	HEATER	--	15
1	PRESSURE_DIAPHRAGM	BRASS	14
1	SUPPORT_PLATE	SS400	13
2	EARTH_TERMINAL_ASS'Y	--	12
3	TERMINAL_LUG	CU	11
1	PACKING	N.B.R.	10
1	GLAND_PLATE	SS400	9
1	TERMINAL_BOX_COVER	SS41	8
1	PACKING	N.B.R.	7
3	CONNECTOR	CUBB1-1/2H	6
3	INSULATOR	EPOXY	5
6	CABLE_GROMMET	N.B.R.	4
1	CABLE_HOLDER	E.G.P	3
1	PACKING	N.B.R.	2
1	TERMINAL_BOX_BODY	SS400	1

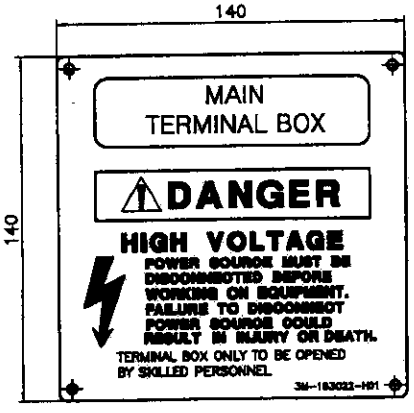

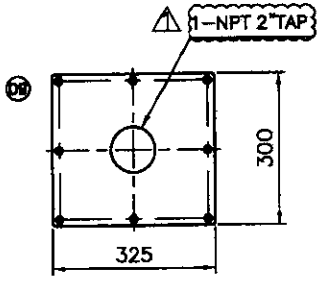

GLAND PLATE

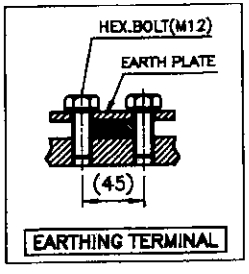

EARTHING TERMINAL

REV	DATE	CONTENTS	REVD BY	CHKD BY	CHKD BY	APPD BY
1	2015.03.11	REVISION OF MARKED	G.E.KIM			J.G.KIM

Q'TY	DESCRIPTION	MATERIAL	DIMENSION	WEIGHT	PART NO.	REMARK	NO.

APPD BY	J.G.KIM	UNIT	mm	SUBJECT	SKEC FORT HILLS
CHKD BY		SCALE	1/10	TITLE	MAIN_T/ BOX_ASS'Y
CHKD BY		PROJEC'N	3차법(3rd Angle)		
DSND BY	G.E.KIM	DATE	2014-08-26		

HYUNDAI HEAVY INDUSTRIES CO., LTD.

REF. NO		Sheet No.	1 of 2
DWG NO	3M-188425	Revision No.	1

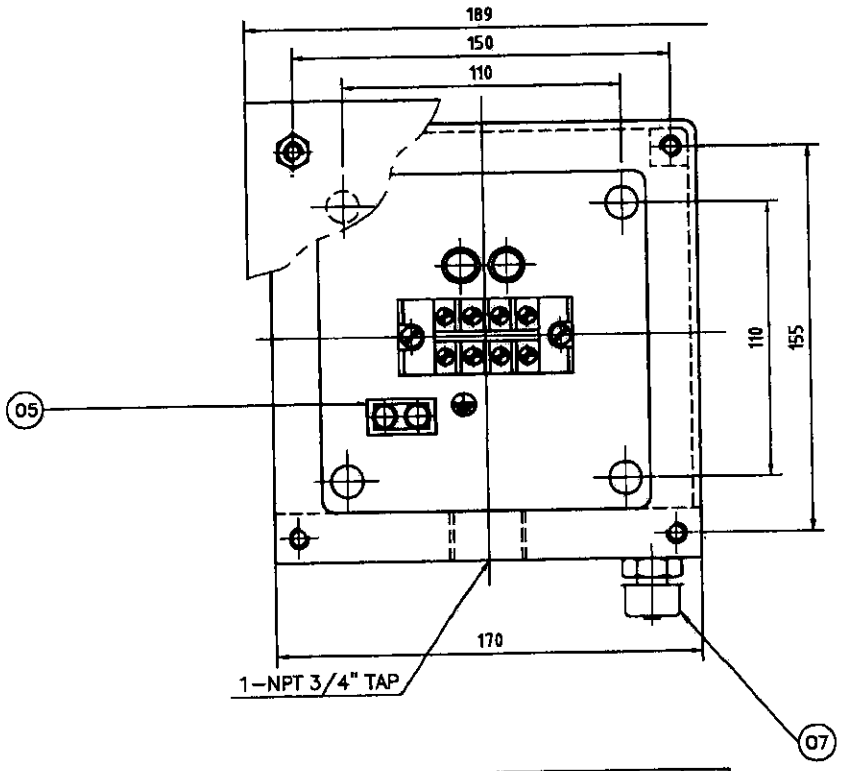

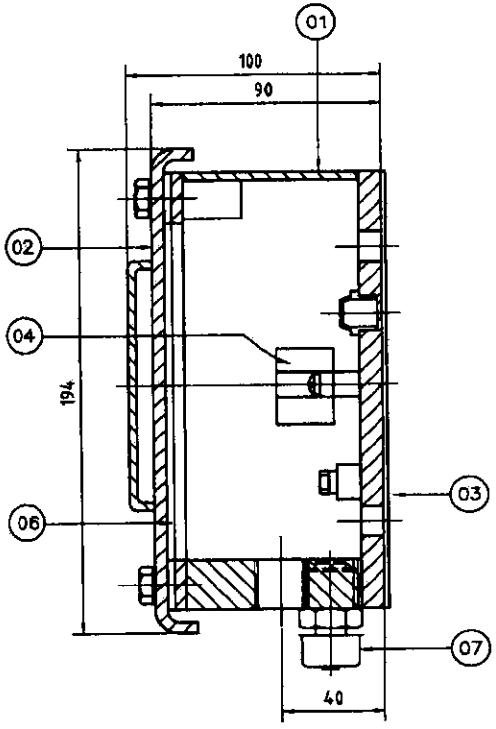

EXPLOSION PROOF BREATHING PLUG	SUS	7
PACKING	SILICON	6
EARTHING TERMINAL ASS'Y	SS400	5
TERMINAL BLOCK	STANDARD	4
PACKING	SILICON	3
TERMINAL BOX COVER	SS400	2
TERMINAL BOX BODY	SS400	1
DESCRIPTION	MATERIAL	NO.

▽	50S
▽▽	12.5S
▽▽▽	3.2S
▽▽▽▽	0.4S

일반가공공차		일반곡물공차	
1-4	±0.1	6-30	±0.5
4-18	±0.2	30-120	±0.8
18-63	±0.3	120-315	±1.2
63-250	±0.5	315-1000	±2.0
250-	±0.8	1000-	±3.0

REV	DATE	CONTENTS	REVD BY	CHKD BY	CHKD BY	APPD BY

Q'TY	DESCRIPTION	MATERIAL	DIMENSION	WEIGHT	PART NO.	REMARK	NO.

APPD BY	J.G.KIM	UNIT	mm
CHKD BY		SCALE	1/2
CHKD BY		PROJEC'N	3rd Angle
DSND BY	G.E.KIM	DATE	2015-03-26

SUBJECT: SKEC FORT HILLS

CAD PROJ 명 \ FILE 명 A3 (1:2)

TITLE: HEATER T/BOX FOR MAIN TERMINAL BOX

6120M-2102A/B, 6120M-2202A/B, 6120M-2302A/B

HYUNDAI HEAVY INDUSTRIES CO., LTD. INDUSTRIAL & POWER SYSTEMS

REF. NO

DWG NO 3M-157253

Sheet No. of

Revision No. 0

HYUNDAI HEAVY INDUSTRIES CO., LTD.

본 도면은 현대중공업(주) 재산이므로 허가없이 복사할 수 없음 (취급유의)

THIS DRAWING IS PROPRIETARY TO HHI. NO PART OF THIS DRAWING MAYBE REPRODUCED WITHOUT THE PERMISSION OF HHI.

HYUNDAI HEAVY INDUSTRIES CO., LTD.

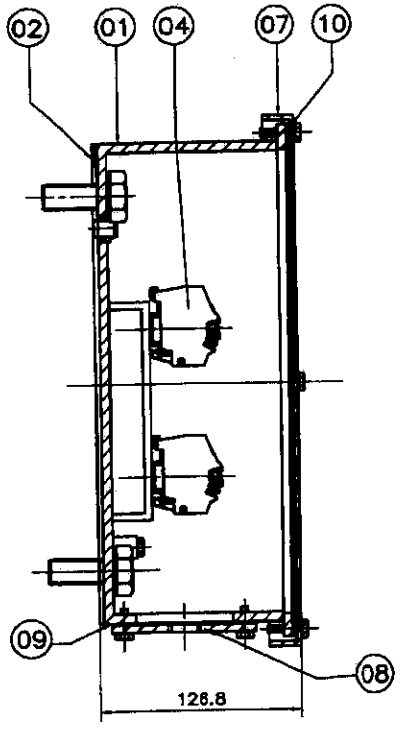

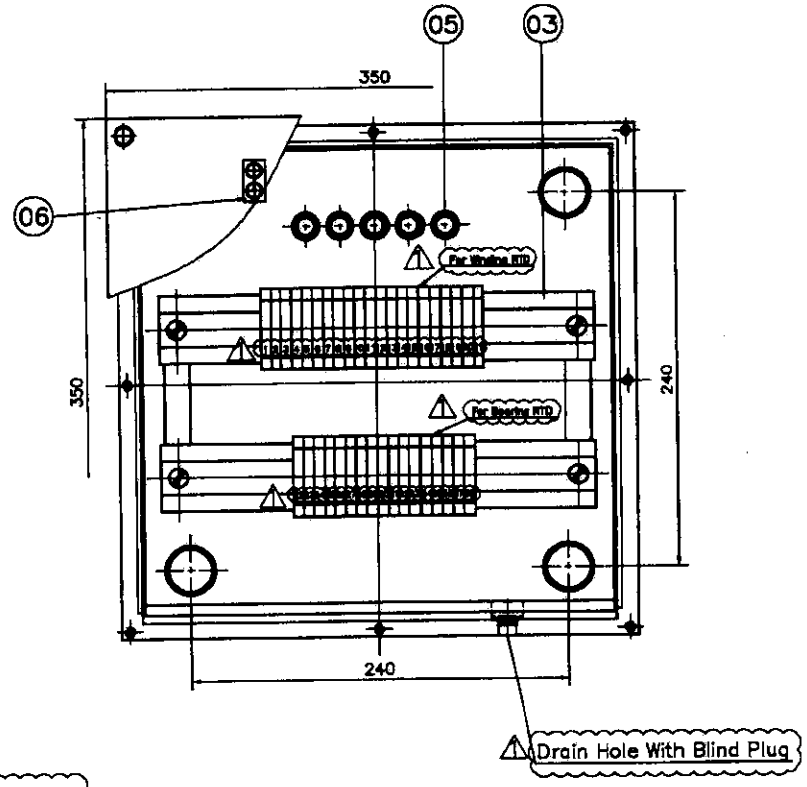

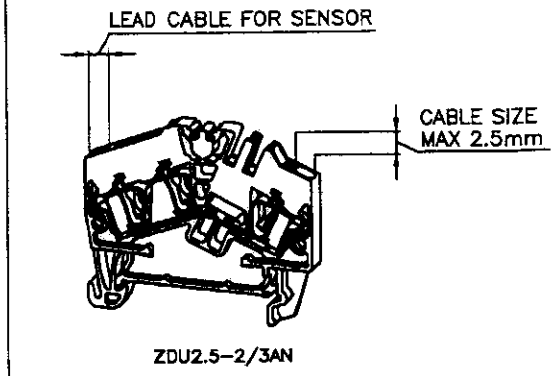

DETAIL OF TERMINAL BLOCK(Maker: Weldmuller)

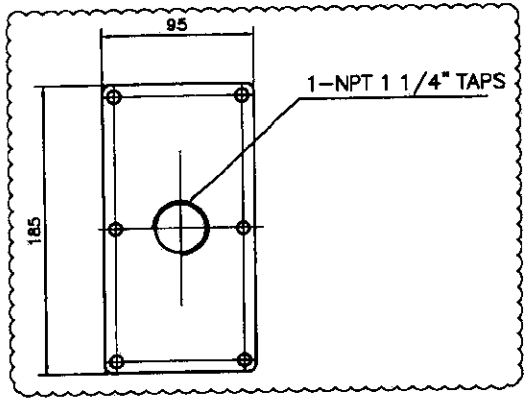

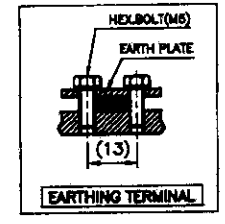

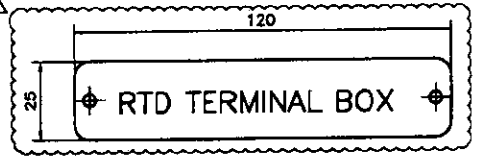

Q'TY	DESCRIPTION	MATERIAL	NO.
1	PACKING	SILICON	10
1	PACKING	SILICON	9
1	CABLE GLAND PLATE	SS400	8
1	TERMINAL BOX COVER	SPCC	7
1	EARTHING ASS'Y	---	6
5	GROMMET	N.B.R.	5
–	TERMINAL BLOCK	---	4
2	RAIL	---	3
1	PACKING	SILICON	2
1	TERMINAL BOX BODY	SS400	1

APPD BY	J.G.KIM	UNIT	mm
CHKD BY		SCALE	1/2.5
CHKD BY		PROJEC'N	3rd Angle
DSND BY	G.E.KIM	DATE	2015-03-11

SUBJECT

DWG SIZE A3 (1:2.5)

TITLE RTD T/BOX ASS'Y

8120M-2102A/B, 8120M-2202A/B, 8120M-2302A/B

HYUNDAI HEAVY INDUSTRIES CO., LTD.

REF. NO

DWG NO 3M-085290

Sheet No. of

Revision No. 1

REV	DATE	REVISION OF MARKED CONTENTS	DSND BY	CHKD BY	APPD BY
			G.E.KIM		J.G.KIM

THIS DRAWING IS PROPRIETARY TO HHI. NO PART OF THIS DRAWING MAYBE REPRODUCED WITHOUT THE PERMISSION OF HHI.

HYUNDAI HEAVY INDUSTRIES CO., LTD.

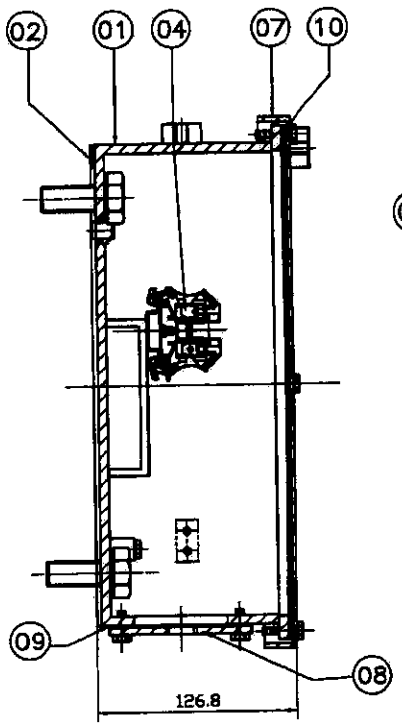

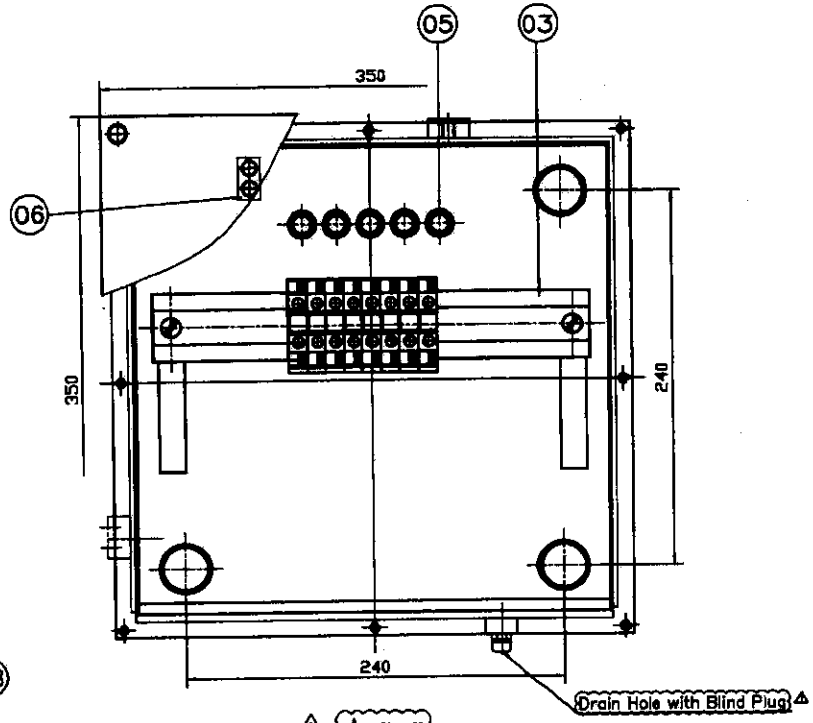

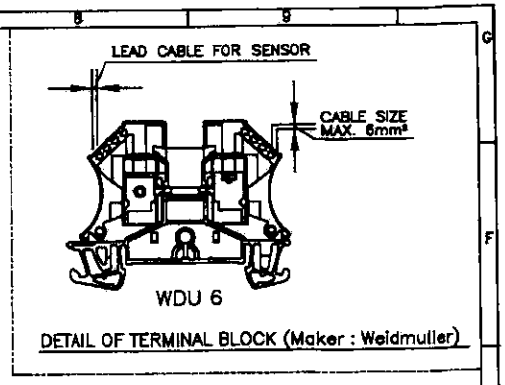

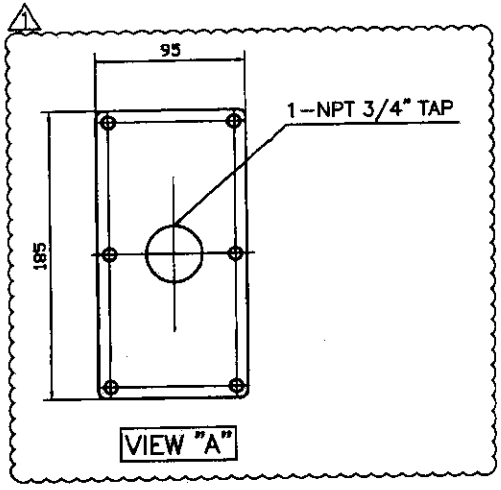

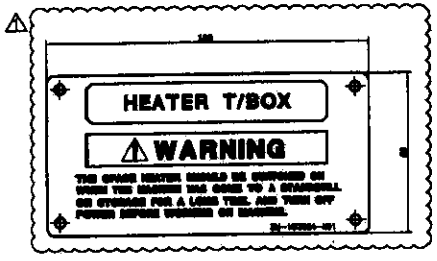

DESCRIPTION	MATERIAL	NO.
PACKING	SILICON	10
PACKING	SILICON	9
CABLE GLAND PLATE	–	8
TERMINAL BOX COVER	SPCC	7
EARTHING ASS'Y	–	6
GROMMET	N.B.R	5
TERMINAL BLOCK	–	4
RAIL	AL	3
PACKING	SILICON	2
TERMINAL BOX BODY	SS400	1

APPD BY	J.G.KIM	UNIT	mm
CHKD BY		SCALE	1/2.5
CHKD BY		PROJEC'N	3角(3rd Angle)
DSND BY	G.E.KIM	DATE	2015-03-11

SUBJECT: SKEC FORT HILLS — DWG SIZE: A3 (1:2.5)

TITLE: HEATER T/BOX FOR MOTOR
6120M-2102A/B, 6120M-2202A/B, 6120M-2302A/B

REF. NO: 3M-085290 — Sheet No. of

DWG NO: 3M-098820-2 — Revision No. 1

HYUNDAI HEAVY INDUSTRIES CO., LTD.

REV	DATE	CONTENTS	REV'D BY	CHKD BY	CHKD BY	APPD BY
1	2015.03.11	REVISION OF MARKED	G.E.KIM			J.G.KIM

THIS DRAWING IS PROPRIETARY TO HHI. NO PART OF THIS DRAWING MAYBE REPRODUCED WITHOUT THE PERMISSION OF HHI.

HYUNDAI HEAVY INDUSTRIES CO., LTD.

THIS DRAWING IS PROPRIETARY TO HHI. NO PART OF THIS DRAWING MAYBE REPRODUCED WITHOUT THE PERMISSION OF HHI.

⚠ RTD T/BOX WIRING DIAGRAM

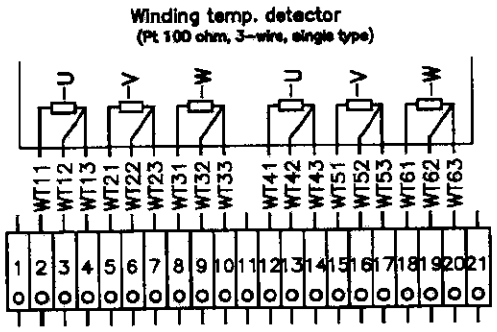

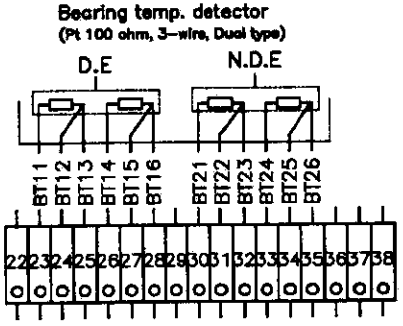

NOTE

1) WT11,12,13,41,42,43 ; Winding temp. sensor (U)
2) WT21,22,23,51,52,53 ; Winding temp. sensor (V)
3) WT31,32,33,61,62,63 ; Winding temp. sensor (W)

} Pt 100 ohm at 0 °C

⚠ 4) BT11,12,13,14,15,16 ; Bearing temp. sensor (D.E SIDE)
5) BT21,22,23,24,25,26 ; Bearing temp. sensor (N-D.E SIDE)

} Pt 100 ohm at 0 °C, Dual

HEATER T/BOX FOR MOTOR WIRING DIAGRAM

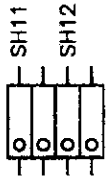

NOTE

1) SH11, 12 : Space Heater

⚠ HEATER T/BOX FOR MAIN T/BOX WIRING DIAGRAM

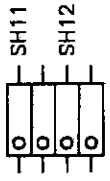

NOTE

1) SH11, 12 : Space Heater

⚠

Motor Tag No.	Temperature Sensor Tag Nos. WINDING U	WINDING V	WINDING W	BEARING D.E	BEARING N-D.E
6120M-2103A	612TE-21304 612TE-21306	612TE-21306 612TE-21307	612TE-21308 612TE-21309	612TE-21303	612TE-21310
6120M-2102B	612TE-21312 612TE-21313	612TE-21314 612TE-21315	612TE-21316 612TE-21317	612TE-21311	612TE-21318
6120M-2203A	612TE-22304 612TE-22306	612TE-22306 612TE-22307	612TE-22308 612TE-22309	612TE-22303	612TE-22310
6120M-2202B	612TE-22312 612TE-22313	612TE-22314 612TE-22315	612TE-22316 612TE-22317	612TE-22311	612TE-22318
6120M-2303A	612TE-23304 612TE-23306	612TE-23306 612TE-23307	612TE-23308 612TE-23309	612TE-23303	612TE-23310
6120M-2302B	612TE-23312 612TE-23313	612TE-23314 612TE-23315	612TE-23316 612TE-23317	612TE-23311	612TE-23318

REV	DATE	CONTENTS	REVD BY	CHKD BY	CHKD BY	APPD BY
⚠	2015.03.11	REVISION OF MARKED	G.E.KIM			J.G.KIM

APPD BY	J.G.KIM	UNIT	mm
CHKD BY		SCALE	N/S
CHKD BY		PROJECT'N	Jiri Angle
DRWD BY	G.E.KIM	DATE	2015-03-11

HYUNDAI HEAVY INDUSTRIES CO., LTD.

SUBJECT

TITLE: WIRING DIAGRAM
⚠ 6120M-2103A/B, 6120M-2203A/B, 6120M-2303A/B

REF. NO

DWG NO: 3M-133804

Sheet No. of

Revision No. 1

FORT HILLS

SK E&C

Vendor Data Document Review Coversheet

SAP No: 03-00114-FT-SE

Purchase Order No: 14037D-ME-PO-MF191-01

Purchase Order Title: API SLURRY PUMP

Vendor Name: FLOWSERVE LAWRENCE PUMPS

Fort Hills Document No: VP612-G-29277-1

Rev: 1B **Rev Date:** 2015-07-06

Document Title: Motor Nameplate Drawing

Vendor Document No: MNP-612-A-G2102A **Rev:** 1

VDDRL Code: P-35

Equipment Tag No: 612GM-2102A, 612GM-2102B, 612GM-2202A, 612GM-2202B, 612GM-2302A, 612GM-2302B

1. ■ Reviewed without comments. Work may proceed.
2. ☐ Reviewed with comments. Work shall proceed subject to incorporation of comments.
3. ☐ Do not proceed. Stop work on affected areas.
4. ☐ Review not required / for information only.
5. ☐ Final certified.

Permission to proceed does not constitute acceptance or approval of design details, calculations, analysis, test methods or material developed or selected by the supplier and does not relieve supplier from full compliance with contractual obligations.

BY: Jeycee Lee
SKEC ENGINEER TO PRINT NAME AND SIGN

DATE: 21 / 07 / 15
(DD/MM/YY)

1B	2015-07-06	For Review	LG	MP	RZ
1A	2015-05-13	For Review	LG	MP	RZ
REV. (PROJECT)	ISSUE DATE	ISSUE PURPOSE	SUBMITTED BY (VENDOR)	CHECKED BY (VENDOR)	APPROVED BY (VENDOR)

HYUNDAI HEAVY INDUSTRIES CO., LTD.

THIS DRAWING IS PROPRIETARY TO HHI. NO PART OF THIS DRAWING MAYBE REPRODUCED WITHOUT THE PERMISSION OF HHI.

① 150 × 90

HYUNDAI

3 PHASE INVERTER DUTY AC INDUCTION MOTOR

TYPE							
VOLTAGE							
BASE Hz	60.5	DUTY TYPE	S1			1800	
RATING	Hz	HP	r.p.m	VOLTAGE	CURRENT	TORQUE	
V.T	40.3	115	1199	2664 V	33.8 A	71.6 kgm	R1 0.3673
V.T	60.5	400	1800	4000 V	53.0 A	161.5 kgm	R2 0.3838
				V	A	kgm	X1 5.1088
				V	A	kgm	X2 6.3170
				V	A	Nm	Xm 157.108
AMBIENT TEMP		INVERTER TYPE					
BEARING(D.E)		6320C3					
BEARING(N.D.E)		631703		SPACE HEATER			
SERIAL NO.			WEIGHT	2030 kg	MANUFACT'G DATE		

MADE IN KOREA

4M-118636

② 90 × 50

LUBRICATION INSTRUCTIONS

	INITIAL SUPPLY	REMARKS	REMARKS INTERVAL
D.E SIDE	240 GR	74 GR	4 MONTHS
N-DE SIDE	160 GR	49 GR	
TYPE OF GREASE			

4M-094630

③ 140 × 140

MAIN TERMINAL BOX

DANGER

HIGH VOLTAGE

POWER SOURCE MUST BE DISCONNECTED BEFORE WORKING ON EQUIPMENT. FAILURE TO DISCONNECT POWER SOURCE COULD RESULT IN INJURY OR DEATH.

TERMINAL BOX ONLY TO BE OPENED BY SKILLED PERSONNEL

3M-163022-H01

④ Quantity:2EA (For Motor) – PHENOLIC

152.5 × 40

612GM-2102A

612GM-2102 A
612GM-2102 B
612GM-2202 A
612GM-2202 B
612GM-2302 A
612GM-2302 B

⑤ 120 × 25

RTD TERMINAL BOX

⑥ Quantity:2EA (For Motor & Main T/Box)

120 × 50

HEATER T/BOX

WARNING

THE SPACE HEATER SHOULD BE SWITCHED ON WHEN THE MACHINE HAS COME TO A STANDSTILL OR STORAGE FOR A LONG TIME. AND TURN OFF POWER BEFORE WORKING ON MACHINE.

3M-163024-H01

⑦ 120 × 25

*Starting limitation per hour : cold 3/hot 2

*Starting limitation per day : 5 times

⑧ 120 × 25

1Phase, 120V, 75W

⑨ 120 × 25

Locked Rotor Current : 344.5 A

△	1	ROTOR CURRENT NAME PLATE	SUS316	t1.0 x 120 x 25				9
△	1	HEATER RATING NAME PLATE	SUS316	t1.0 x 120 x 25				8
	1	STAR TIMES NAME PLATE	SUS316	t1.0 x 120 x 25				7
	2	HEATER T/BOX NAME PLATE	SUS316	t1.0 x 60 x 120				6
	1	ACCESSORY NAME PLATE	SUS316	t1.0 x 25 x 120				5
△	2	TAG NO. NAME PLATE	PHENOLIC	t1.0 x 40 x 152.5				4
	1	MAIN T/BOX NAME PLATE	SUS316	t1.0 x 140 x 140				3
	1	LUBRICANT NAME PLATE	SUS316	t1.0 x 50 x 90				2
	1	MAIN NAME PLATE	SUS316	t1.0				1

APPD BY	Y.S.JOO	UNIT	mm	SUBJECT	SKEC FORT HILLS
CHKD BY	J.B.KIM	SCALE	1/1	DWG SIZE	A3 (1:1)
CHKD BY	--	PROJEC'N	3rd Angle	TITLE	NAME PLATE △612GM-2102A/B, 612GM-2202A/B, 612GM-2302A/B
DSND BY	S.H.PARK	DATE	2014-08-26	REF. NO	
				Sheet No.	of
				DWG NO	4M-091240
				Revision No.	5

HYUNDAI HEAVY INDUSTRIES CO., LTD.

REV	DATE	CONTENTS	REVD BY	CHKD BY	CHKD BY	APPD BY
△	2015.06.23	REVISION OF MARKED	G.E.KIM			J.G.KIM
△	2015.05.08	REVISION OF MARKED	G.E.KIM			J.G.KIM
△	2015.03.26	REVISION OF MARKED	G.E.KIM			J.G.KIM

SECTION 10:
P&ID

PUMP SYSTEM CONNECTION LIST		
CONN #	SIZE & TYPE	DESCRIPTION
CV1	3/4" 150# RF FLANGE	COOLING WATER SUPPLY
CV2	3/4" 150# RF FLANGE	COOLING WATER RETURN
D	1/2" NPT	MECHANICAL SEAL DRAIN
B1	3/4" NPT	PLAN 53B OIL DRAIN
B2	3/4" NPT	PLAN 53B COOLING WATER DRAIN
F	3/4" NPT	MECHANICAL SEAL PLAN 32 FLUSH INLET (PLUGGED)
K	2" NPT	SKID DRAIN
M1	2" NPT	MOTOR PORT, 3-PHASE POWER WIRING
M2	3/4" NPT	MOTOR PORT, HEATER POWER WIRING
M3	1-1/4" NPT	MOTOR PORT, WINDING & BEARING RTDs
M4	3/4" NPT	MOTOR PORT, MTB HEATER POWER WIRING
M5	3/4" NPT	MOTOR PORT, CIRCULATING PUMP
L1	1-1/4" NPT	BEARING FAME OIL FILLER CAP / BREATHER & OIL RING
L2	1/4" NPT	PROVISION FOR BEARING PURGE OIL MIST (PLUGGED)
L3	1-1/4" NPT	OIL RING OBSERVATION PORT (PLUGGED)
L4	3/4" NPT	BEARING FRAME OIL DRAIN

PUMP SYSTEM CONNECTION LIST		
CONN #	SIZE & TYPE	DESCRIPTION
BI	3/4" NPT	MECHANICAL SEAL PLAN 53B BARRIER FLUID INLET
BO	3/4" NPT	MECHANICAL SEAL PLAN 53B BARRIER FLUID OUTLET
N	1-1/2" 300# RF FLANGE	CASING VENT
N1	1-1/2" 300# RF FLANGE	CASING DRAIN
P1	3/4" NPT	MECHANICAL SEAL PRESSURE PORT
P2	3/4" NPT	DRAIN FROM SEAL CHAMBER PRESSURE MEASUREMENT LINE (PLUGGED)
P3	3/4" NPT	MECHANICAL SEAL SUPPLY LINE DRAIN (PLUGGED)
Q	1/2" NPT	MECHANICAL SEAL QUENCH INLET (PLAN 61 PLUGGED
V	3/4" NPT	PLAN 53B COOLER OIL VENT
V1	3/4" NPT	PLAN 53B COOLING WATER VENT
X	3/4" 300# RF FLANGE	PLAN 53B AUTO MAKE-UP BARRIER FILL
Y	0.375-32 UNS	PLAN 53B NITROGEN INLET
Z	ø 1.12" (SPOT FACE)	PROVISION FOR VIBRATION MONITORING EQUIPMENT: 4 PLACES

NOTES:

1. SCOPE OF SUPPLY

   BY FLP / BY CUSTOMER

   FLP = FLOWSERVE LAWRENCE PUMPS

2. TAG NUMBERS SHOWN FOR PUMP 612G-2102B ONLY ON THIS SHEET. SEE SHEET TWO FOR TAG NUMBERS FOR ALL PUMPS.

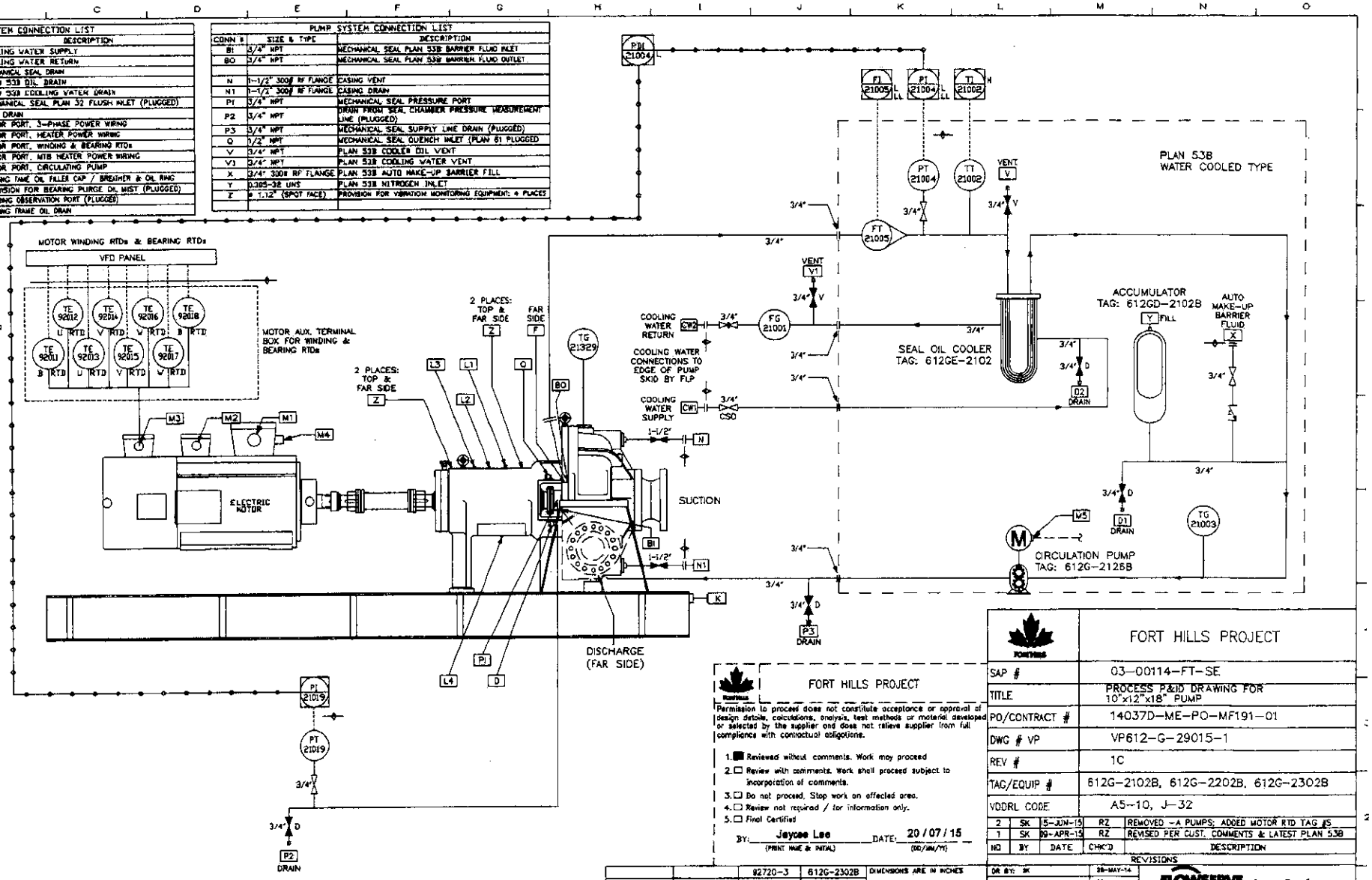

LEGEND

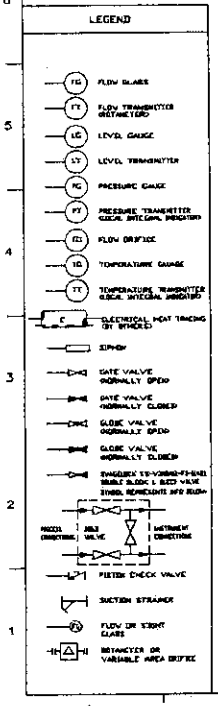

LAWRENCE PUMPS DIVISION OF FLOWSERVE CORP FLS PUMP
REFER TO: FLOWSERVE CORP. OUTLINE (GA) DRAWING M71274
FLOWSERVE CORP. CROSS SECTION (CS) DRAWING D71200

FORT HILLS PROJECT

Permission to proceed does not constitute acceptance or approval of design details, calculations, analysis, test methods or material developed or selected by the supplier and does not relieve supplier from full compliance with contractual obligations.

1. ■ Reviewed without comments. Work may proceed
2. ☐ Review with comments. Work shall proceed subject to incorporation of comments.
3. ☐ Do not proceed. Stop work on affected area.
4. ☐ Review not required / for information only.
5. ☐ Final Certified

BY: Jaycee Lee (PRINT NAME & INITIAL) DATE: 20 / 07 / 15 (DD/MM/YY)

		92720-3	612G-2302B
92720-1	612G-2102B		
		92720-2	612G-2202B
PUMP SERIAL NO.	ITEM NO.	PUMP SERIAL NO.	ITEM NO.

CUSTOMER: SKEC
END USER: FORT HILLS ENERGY LP
LOCATION: FOR HILLS, ALBERTA, CANADA
SERVICE: 1ST STAGE SETTLER UNDERFLOW PUMPS

DIMENSIONS ARE IN INCHES
UNTOLERANCED DIMENSIONS ARE FOR REFERENCE ONLY
DO NOT USE FOR CONSTRUCTION PURPOSES UNLESS CERTIFIED

© 2014 LAWRENCE PUMPS (DIVISION OF FLOWSERVE)
NOTICE: This document is the property of Lawrence Pumps and is protected by U.S. and international copyrights: all rights reserved. The contents are proprietary to Lawrence Pumps and may be the subject of issued or pending patents and/or confidentiality agreements. Retention, retrieval, use, disclosure or conveyance to third parties of this document and/or its contents is prohibited without the prior written consent of Lawrence Pumps.

DR BY: JK		28-MAY-14	
CK BY: RZ		28-MAY-14	
APP ENG: RZ		28-MAY-14	
2	SK	15-JUN-15	RZ	REMOVED -A PUMPS; ADDED MOTOR RTD TAG #S
1	SK	09-APR-15	RZ	REVISED PER CUST. COMMENTS & LATEST PLAN 53B
NO	BY	DATE	CHK'D	DESCRIPTION

REVISIONS

FORT HILLS PROJECT

SAP #	03-00114-FT-SE
TITLE	PROCESS P&ID DRAWING FOR 10"x12"x18" PUMP
PO/CONTRACT #	14037D-ME-PO-MF191-01
DWG # VP	VP612-G-29015-1
REV #	1C
TAG/EQUIP #	612G-2102B, 612G-2202B, 612G-2302B
VDDRL CODE	A5-10, J-32

FLOWSERVE Lawrence Pumps

P&ID OF 10X12X18" SERIES HPX 6000 HORIZONTAL FULLY LINED SLURRY PUMP

SIZE D | DWG NO 71364 | REV NO. 69623 | SCALE NONE | SHEET 1 OF 2

PUMP TAG NO.	FLS PUMP SERIAL #	SERVICE	TG #A Pump Case	PT/PI #A Plan 53B	PT/PI #B Pump Seal	PDI #A (Software Tag Only)	TT/TI #A Plan 53A	FG #A CWS	TG #A Plan 53B	FT/FI #A Plan 53B	SEAL OIL COOLER	ACCUMULATOR	CIRCULATION PUMP
612G-2102B	92720-1	1st Stage Settler U/F Pump B	612TG-21329	612PT-21004	612PT-21019	612PDI-21004	612TT-21002	612FG-21001	612TG-21003	612FT-21005	612GE-2102	612GD-2102B	612G-2126B
612G-2202B	92720-2	1st Stage Settler U/F Pump B	612TG-22329	612PT-22004	612PT-22019	612PDI-22004	612TT-22002	612FG-22001	612TG-22003	612FT-22005	612GE-2202	612GD-2202B	612G-2226B
612G-2302B	92720-3	1st Stage Settler U/F Pump B	612TG-23329	612PT-23004	612PT-23019	612PDI-23004	612TT-23002	612FG-23001	612TG-23003	612FT-23005	612GE-2302	612GD-2302B	612G-2326B

MOTOR TAG NO.	FLS PUMP SERIAL #	SERVICE	Motor DE Bearing #A	Motor U Winding #B	Motor U Winding #C	Motor V Winding #D	Motor V Winding #E	Motor W Winding #F	Motor W Winding #G	Motor NDE Bearing #H
612GM-2102B	92720-1	1st Stage Settler U/F Pump B	612TE-21311	612TE-21312	612TE-21313	612TE-21314	612TE-21315	612TE-21316	612TE-21317	612TE-21318
612GM-2202B	92720-2	1st Stage Settler U/F Pump B	612TE-22311	612TE-22312	612TE-22313	612TE-22314	612TE-22315	612TE-22316	612TE-22317	612TE-22318
612GM-2302B	92720-3	1st Stage Settler U/F Pump B	612TE-23311	612TE-23312	612TE-23313	612TE-23314	612TE-23315	612TE-23316	612TE-23317	612TE-23318

LEGEND

- FG — FLOW GLASS
- FT — FLOW TRANSMITTER (RETINETER)
- LG — LEVEL GAUGE
- LT — LEVEL TRANSMITTER
- PG — PRESSURE GAUGE
- PT — PRESSURE TRANSMITTER (LOCAL INTEGRAL INDICATOR)
- FO — FLOW ORIFICE
- TG — TEMPERATURE GAUGE
- TT — TEMPERATURE TRANSMITTER (LOCAL INTEGRAL INDICATOR)
- TE — ELECTRICAL HEAT TRACING
- STRAIN
- GATE VALVE (NORMALLY OPEN)
- GATE VALVE (NORMALLY CLOSED)
- GLOBE VALVE (NORMALLY OPEN)
- GLOBE VALVE (NORMALLY CLOSED)
- DIAGRAM SE-V3042-F0-J-001 (BALL BLOCK & BLEED VALVE VENT, REPRESENTS BPV BELOW)
- PROCESS DIRECTION — BALL VALVE — INSTRUMENT DIRECTION
- PISTON CHECK VALVE
- SUCTION STRAINER
- FG — FLOW OR SIGHT GLASS
- RO — ROTAMETER OR VARIABLE AREA ORIFICE

NOTES:

1. SCOPE OF SUPPLY

BY FLP ✦ BY CUSTOMER

FLP = FLOWSERVE LAWRENCE PUMPS

LAWRENCE PUMPS DIVISION OF FLOWSERVE CORP FLS PUMP
REFER TO: FLOWSERVE CORP. OUTLINE (GA) DRAWING M71274
FLOWSERVE CORP. CROSS SECTION (CS) DRAWING D71200

FORT HILLS PROJECT

Permission to proceed does not constitute acceptance or approval of design details, calculations, analysis, test methods or material developed or selected by the supplier and does not relieve supplier from full compliance with contractual obligations.

1. ■ Reviewed without comments. Work may proceed
2. ☐ Review with comments. Work shall proceed subject to incorporation of comments.
3. ☐ Do not proceed. Stop work on affected area.
4. ☐ Review not required / for information only.
5. ☐ Final Certified

BY: Jeyces Lee (PRINT NAME & INITIAL) DATE: 20 / 07 / 15 (DD/MM/YY)

FORT HILLS PROJECT	
SAP #	03-00114-FT-SE
TITLE	PROCESS P&ID DRAWING FOR 10"x12"x18" PUMP
PO/CONTRACT #	14037D-ME-PO-MF191-01
DWG # VP	VP612-G-29015-1
REV #	1C
TAG/EQUIP #	612G-2102B, 612G-2202B, 612G-2302B
VDDRL CODE	A5-10, J-32

REVISIONS

NO	BY	DATE	CHK'D	DESCRIPTION
2	SK	15-JUN-15	RZ	REMOVED -A PUMPS; ADDED MOTOR TAG #S
1	SK	09-APR-15	RZ	REVISED PER CUST. COMMENTS & LATEST PLAN 53B

PUMP SERIAL NO.	ITEM NO.	PUMP SERIAL NO.	ITEM NO.
92720-1	612G-2102B	92720-3	612G-2302B
		92720-2	612G-2202B

CUSTOMER: SKEC
END USER: FORT HILLS ENERGY LP
LOCATION: FORT HILLS, ALBERTA, CANADA
SERVICE: 1ST STAGE SETTLER UNDERFLOW PUMPS

DIMENSIONS ARE IN INCHES
UNTOLERANCED DIMENSIONS ARE FOR REFERENCE ONLY
DO NOT USE FOR CONSTRUCTION PURPOSES UNLESS CERTIFIED

DR BY: SK	28-MAY-14
CK BY: RZ	28-MAY-14
APP ENG: RZ	28-MAY-14

© 2014 LAWRENCE PUMPS (DIVISION OF FLOWSERVE)
NOTICE! This document is the property of Lawrence Pumps and is protected by U.S. and international copyrights; all rights reserved. The contents are proprietary to Lawrence Pumps and may be the subject of issued or pending patents and/or confidentiality agreements. Retention, retrieval, use, disclosure or conveyance to third parties of the document and/or its contents is prohibited without the prior written consent of Lawrence Pumps.

FLOWSERVE Lawrence Pumps

P&ID OF 10X12X18" SERIES HPX 5000 HORIZONTAL FULLY LINED SLURRY PUMP

SIZE D | DWG NO 71364
AP DWG 69623 | SCALE NONE | SHEET 2 OF 2